"TITLE 18, SECTION 1001, U.S. CODE DISCLOSURE
THE ENTIRE DOCUMENT AND ALL INFORMATION THEREIN IS PROPRIETARY TO COLT'S INC AND SHALL NOT BE REPRODUCED, SUPPLIED OR COPIED IN WHOLE OR IN PART, DISCLOSED OR MADE AVAILABLE TO ANY OTHER PERSON, FIRM, OR CORPORATION OR OTHERWISE MADE SUBJECT TO THE EXTENT NECESSARY FOR AND THEN ONLY IN CONNECTION WITH THE PREPARATION AND/OR PRESENTATION OF BIDS OR PROPOSALS RELATED TO A PROCUREMENT BEING EFFECTED BY THE UNITED STATES GOVERNMENT OR IN CONNECTION WITH THE MANUFACTURE IN THE UNITED STATES EITHER BY THE UNITED STATES GOVERNMENT OR UNDER A CONTRACT WITH THE UNITED STATES GOVERNMENT. THIS DOCUMENT WILL BE RETURNED OF IN ACCORDANCE WITH INSTRUCTIONS ISSUED BY THE RESPONSIBLE CONTRACTING OFFICE ON COMPLETION OF THE PURPOSE FOR WHICH IT WAS LOANED.

NOTES:-

1- SPEC MIL-W-13855 AND ANSI Y14.5-73 APPLY.
2- MATERIAL:- MAKE FROM FORGING, UPPER RECEIVER-12576279.
3- CENTER LINE [-D-] (H-7) AND [-J-] (E-7) ARE ESTABLISHED WHEN LOCATING ON Ø [-C-], AND SLOT [-F-] AT AREA [-T-] (G-12).
4- WITNESS MARK (K-11) TO DETERMINE STARTING POINT FOR MACHINING.
5- ALL DIMENSIONS APPLY BEFORE PROTECTIVE FINISH UNLESS OTHERWISE NOTED.
6- BREAK SHARP EDGES .005 ± .010 UNLESS OTHERWISE NOTED.
7- FILLET RADII .015 – .012 UNLESS OTHERWISE NOTED.
8- EVERLUBE 626 OR 626S CURED AT 275°F ± 25°F FOR 1 HOUR OR MIL-L-46010 CURED 300°F TO 325°F FOR 2 HOURS, TO BE APPLIED AFTER PROTECTIVE FINISH TO INTERIOR EXCEPT FOR .875 TO 1.25 LENGTH (B-19). FILM THICKNESS .0002 ± .0001.
9- FINISH 125√ ALL MACHINED SURFACES, EXCEPT AS NOTED.
10- PROTECTIVE FINISH:- MIL-A-8625. TYPE III CLASS 2, FILM THICKNESS .0010 ± .0002, FINISH SHALL BE LUSTERLESS (FLAT), APPROX BLACK, NO. 37038, BUT NOT LIGHTER THAN GRAY, NO. 36076, OF FED-STD-595, AND SEAL. GRIT BLAST PRIOR TO FINISH TO PROVIDE NON REFLECTIVE MATTE SURFACE AFTER FINISH.
11- LATERAL MISMATCH PERMISSIBLE BETWEEN .625 AND 1.06 CUTS. THESE CUTS MUST NOT INTERFERE WITH SLOT [-F-]

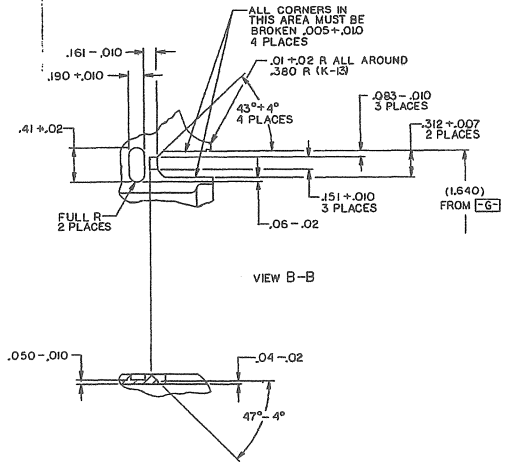

VIEW B-B

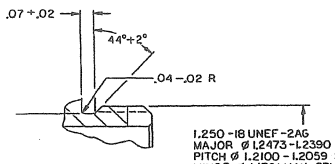

DETAIL C

1.250 -18 UNEF-2A
MAJOR Ø 1.2473 - 1.2390 SPL BEFORE
PITCH Ø 1.2100 - 1.2059 SPL BEFORE
MINOR Ø 1.1791 MAX SPL BEFORE CO
⊕ C Ⓢ Ø .006 Ⓢ
MAJOR Ø 1.2485 – 1.2398 AFTER COA
PITCH Ø 1.2124 – 1.2075 AFTER COAT
MINOR Ø 1.1803 MAX AFTER COATING

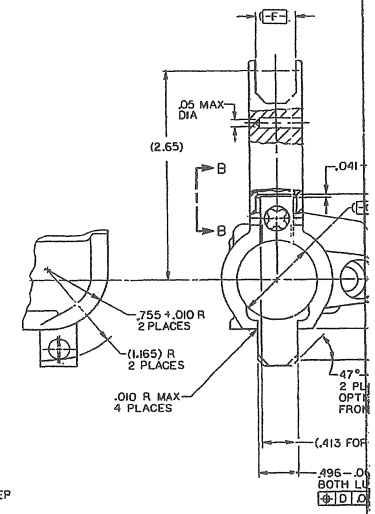

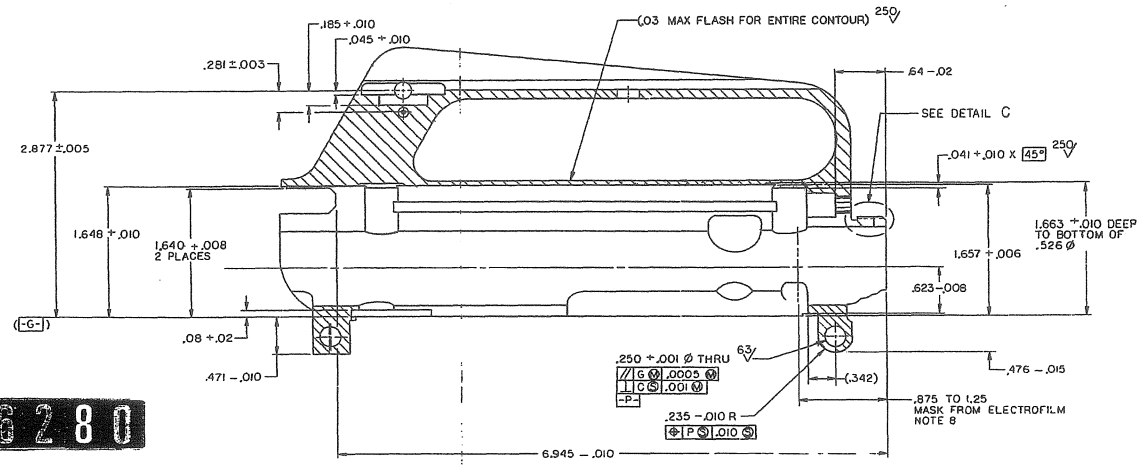

SECTION A-A

J 12576280
REV.
F-1/3

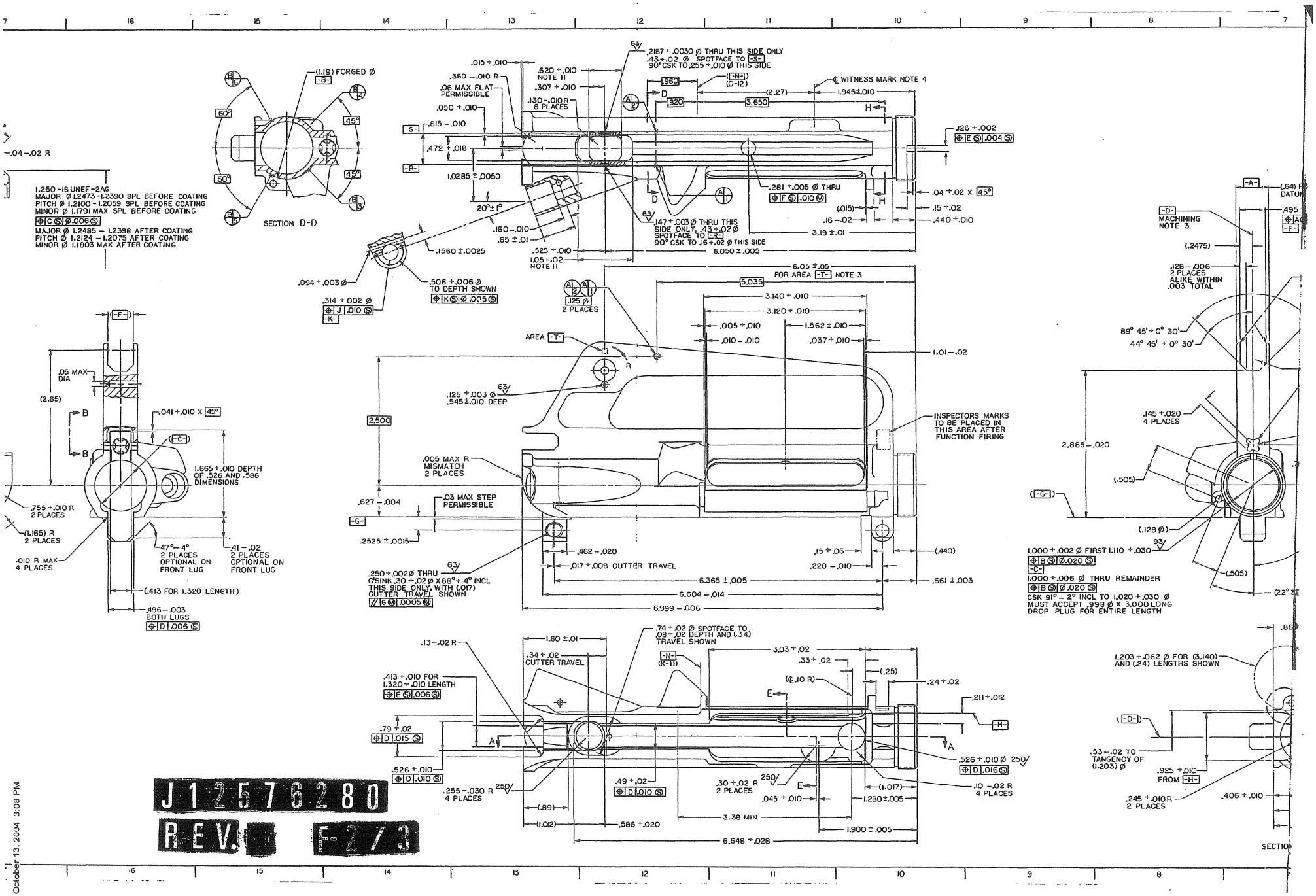
1.250-18 UNEF-2AG
MAJOR Ø 1.2473-1.2390 SPL BEFORE COATING
PITCH Ø 1.2100-1.2059 SPL BEFORE COATING
MINOR Ø 1.1791 MAX SPL BEFORE COATING
MAJOR Ø 1.2485 - 1.2398 AFTER COATING
PITCH Ø 1.2124 - 1.2075 AFTER COATING
MINOR Ø 1.1803 MAX AFTER COATING
SECTION D-D
(1.19) FORGED Ø
.2187 +.0030 Ø THRU THIS SIDE ONLY
.43 +.02 Ø SPOTFACE TO -S-
90° CSK TO .255 +.010 Ø THIS SIDE
℄ WITNESS MARK NOTE 4
.620 +.010
NOTE 11
.06 MAX FLAT PERMISSIBLE
.130 -.010 R 8 PLACES
.281 +.005 Ø THRU
.147 +.003 Ø THRU THIS SIDE ONLY, .43 +.02 Ø SPOTFACE TO -R-
90° CSK TO .16 +.02 Ø THIS SIDE
.506 +.006 Ø TO DEPTH SHOWN
.314 +.002 Ø
.125 Ø 2 PLACES
AREA -T-
.125 +.003 Ø
.545 ±.010 DEEP
INSPECTORS MARKS TO BE PLACED IN THIS AREA AFTER FUNCTION FIRING
.005 MAX R MISMATCH 2 PLACES
.03 MAX STEP PERMISSIBLE
.250 +.002 Ø THRU
C'SINK .30 +.02 Ø X 88° + 4° INCL THIS SIDE ONLY WITH (.017) CUTTER TRAVEL SHOWN
.017 +.008 CUTTER TRAVEL
6.604 - .014
6.999 - .006
6.050 ± .005
6.05 ± .05
FOR AREA -T- NOTE 3
MACHINING NOTE 3
.128 - .006
2 PLACES ALIKE WITHIN .003 TOTAL
89° 45' + 0° 30'
44° 45' + 0° 30'
.145 +.020
4 PLACES
1.000 +.002 Ø FIRST 1.110 +.030
1.000 +.006 Ø THRU REMAINDER
CSK 91° - 2° INCL TO 1.020 +.030 Ø
MUST ACCEPT .998 Ø X 3.000 LONG DROP PLUG FOR ENTIRE LENGTH
.74 +.02 Ø SPOTFACE TO .08 +.02 DEPTH AND (.34) TRAVEL SHOWN
.34 +.02
CUTTER TRAVEL
.413 +.010 FOR 1.320 +.010 LENGTH
.526 +.010 Ø
.255 -.030 R 4 PLACES
.30 +.02 R 2 PLACES
.10 -.02 R 4 PLACES
.526 +.010 Ø
1.203 +.062 Ø FOR (3.140) AND (.24) LENGTHS SHOWN
.53 -.02 TO TANGENCY OF (1.203) Ø
.925 +.010 FROM -H-
.245 +.010 R 2 PLACES
.406 +.010
.05 MAX DIA
.041 +.010 X 45°
1.665 +.010 DEPTH OF .526 AND .586 DIMENSIONS
.755 +.010 R 2 PLACES
(1.165) R 2 PLACES
.010 R MAX 4 PLACES
47° - 4° 2 PLACES OPTIONAL ON FRONT LUG
.41 - .02 2 PLACES OPTIONAL ON FRONT LUG
(.413 FOR 1.320 LENGTH)
.496 - .003 BOTH LUGS
J 1 2 5 7 6 2 8 0
REV.
F-2/3
October 13, 2004 3:08 PM

REVISIONS			
SYM	DESCRIPTION	DATE	APPROVAL
–	PRODUCTION RELEASE ERR W650010	861105	

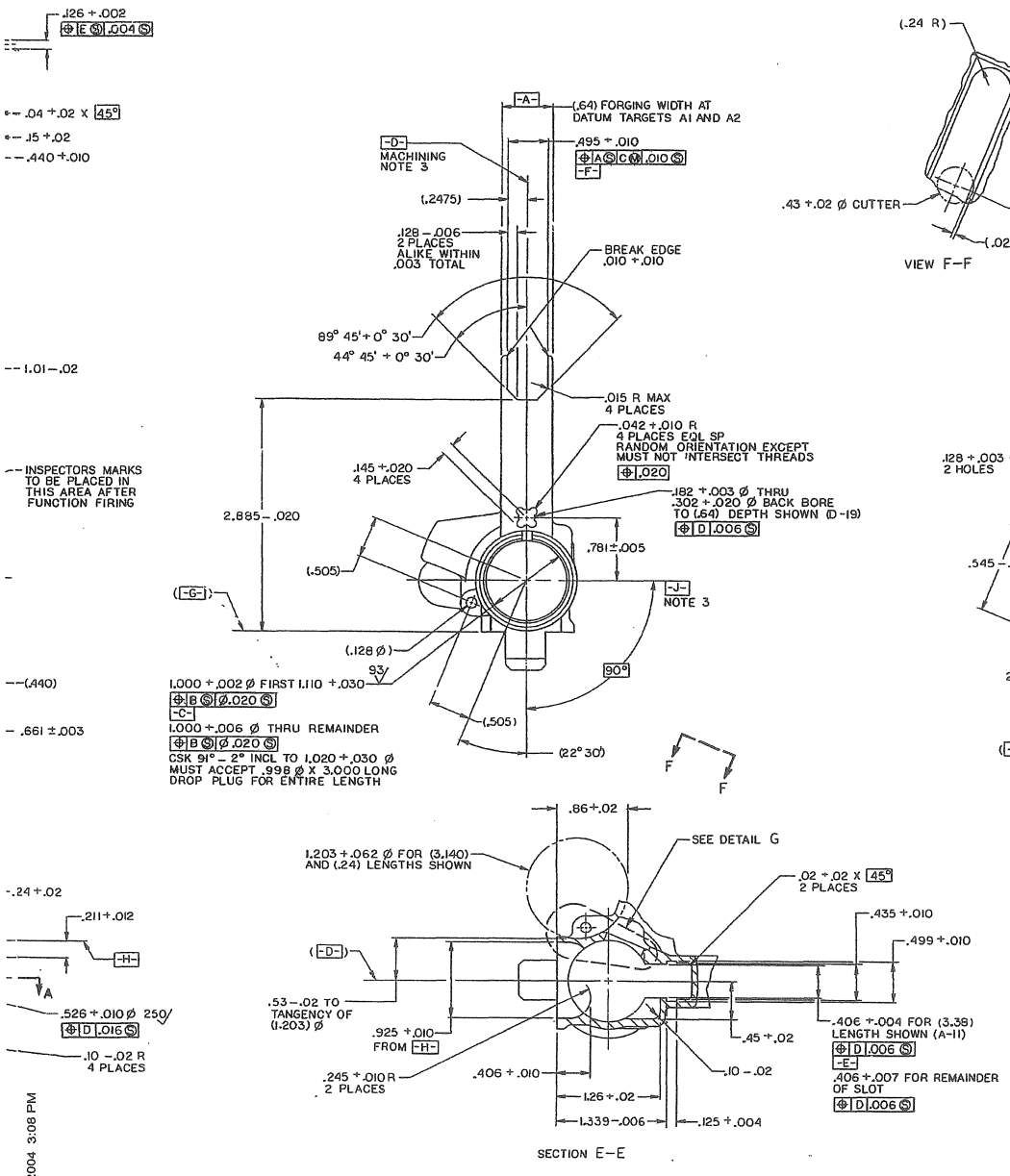

SECTION E–E

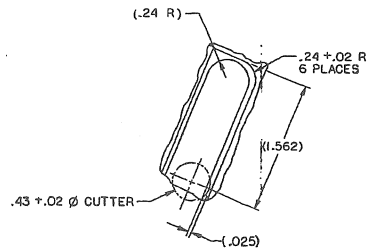

VIEW F–F

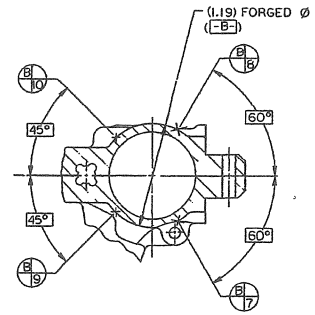

SECTION H–H

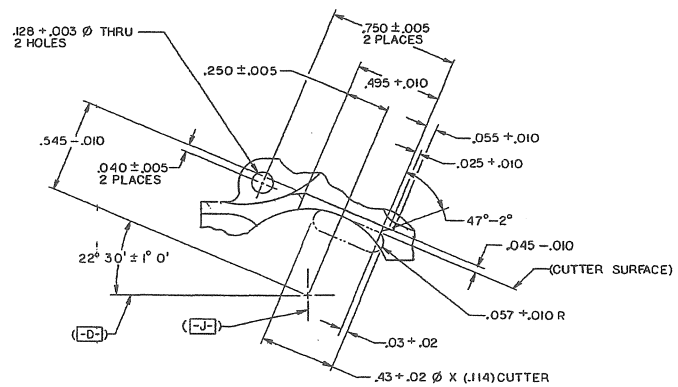

DETAIL G
SCALE : 4/1

F-3/3

PART NO. 12576280

MECHANICAL PROPERTIES	DO NOT SCALE DRAWING UNLESS OTHERWISE SPECIFIED DIMENSIONS ARE IN INCHES	ORIGINAL DATE OF DRAWING 85-11-05	U.S. ARMY ARMAMENT RESEARCH AND DEVELOPMENT CENTER DOVER NEW JERSEY 07801		
TP	TOLERANCES ON DECIMALS ±	DRAFTSMAN	CHECKER	RECEIVER, UPPER	
TS	FRACTIONS ± ANGLES ±	ENGR	ENGR		
ELX		ENGR	ENGR		
RA					
BH					
RH					
D8448523 NEXT ASSY	M16A1 USED ON			SIZE J	CODE IDENT NO. 19200 / 12576280
APPLICATION				SCALE 2/1	UNIT WT

12576280

October 13, 2004 3:08 PM