NOTICE: RESTRICTED AS TO USE AND DISCLOSURE

THIS ENTIRE DOCUMENT AND ALL INFORMATION THEREON IS PROPRIETARY TO COLT'S INC AND SHALL NOT BE REPRODUCED, DUPLICATED OR COPIED IN WHOLE OR IN PART, DISCLOSED OR MADE AVAILABLE TO ANY OTHER PERSON, FIRM, OR CORPORATION OR OTHERWISE USED EXCEPT TO THE EXTENT NECESSARY FOR AND THEN ONLY IN CONNECTION WITH THE PREPARATION AND/OR SUBMISSION OF BIDS OR PROPOSALS RELATED TO A PROCUREMENT BEING EFFECTED BY THE UNITED STATES GOVERNMENT OR IN CONNECTION WITH THE MANUFACTURE IN THE UNITED STATES EITHER BY THE UNITED STATES GOVERNMENT OR UNDER A CONTRACT WITH THE UNITED STATES GOVERNMENT. THIS DOCUMENT WILL BE DISPOSED OF IN ACCORDANCE WITH INSTRUCTIONS ISSUED BY THE RESPONSIBLE CONTRACTING OFFICER UPON COMPLETION OF THE PURPOSE FOR WHICH IT WAS ISSUED.

NOTE:

1. FINISH 125 EXCEPT AS NOTED.
2. SUGGESTED HEAT TREAT PROCEDURE: OIL QUENCH FROM 1575°F. TEMPER AT 1100°F FOR 1 HOUR.
3. FINISH 1.2.2.2 OF MIL-STD-171 ON DIA -A- AND -C-. FILM THICKNESS .0002/.0003.
4. ALL OTHER SURFACES TO RECEIVE FINISH 5.3.1.2 OF MIL-STD-171.
5. BREAK SHARP EDGES .005+.010.
6. MIL-W-13855 APPLIES.
7. FOR GAGING PURPOSED ONLY. THE DEPTH OF PENETRATION OF A .1158 -.0002 GAGE PIN SHALL BE 1.100 MIN TO 1.135 MAX.

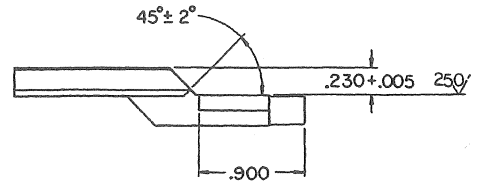

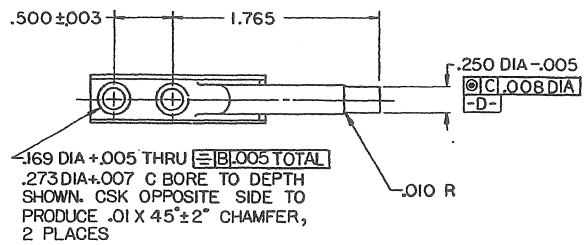

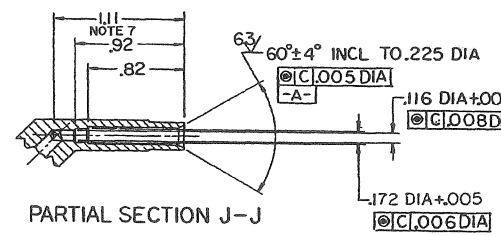

PARTIAL SECTION J-J

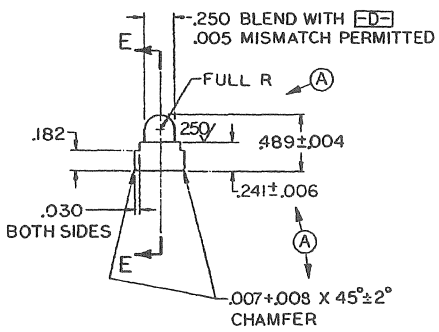

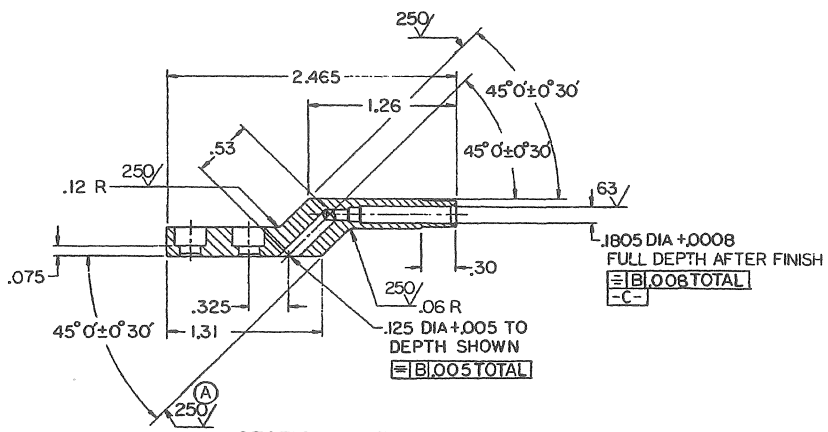

SECTION E-E

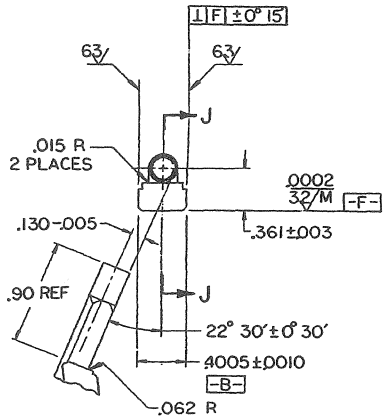

REVISIONS					
MF	ZONE	LTR	DESCRIPTION	DATE	APPROVED
			REDRAWN FROM COLT'S DRAWING D61547 REV D	27APR70	
		A	(8) SEE ED HQR 10631	20 FEB 71	
		B	(7) SEE ERR HQR 20778	6 OCT 72	
		C	SEE ERR HQR 50604	5 FEB 75	
		D	NOR W2S0026 82-05-21	83-02-08	
		E	ERR Z9Z1295F (ECP G0S3110/900709)	901108	
		F	NOR G0S3166/901011	910130	
		G	NOR G1S2018 910708	91-10-11	
		H	NOR G2S3059 920716 (ECP G2S3060 920630)	92-08-11	
		J	NOR G6S3142 961024	961215	JB

MECHANICAL PROPERTIES			
YS MIN			
YS MAX			
EL 2			
RA		8448505	M4
			M16A2
BH			M16
		C8448505	M16A1
RH	C26-32	NEXT ASSY	USED ON
		APPLICATION	

UNLESS OTHERWISE SPECIFIED DIMENSIONS ARE IN INCHES
TOLERANCES:
ANGLES ± —
3 PLACE DECIMALS ±.005
2 PLACE DECIMALS ±.01

MATERIAL
STEEL, AISI 4130
GUN QUALITY
MAX BHN 229

FINAL PROTECTIVE FINISH
SEE NOTES 3 & 4

CONTRACT NO:

DATE 27 APR 1970
PREPARED
CHECKED
ENGINEER
SUBMITTED
APPROVED

CURRENT DESIGN ACTIVITY FSCM NO. 19200
U S ARMY ARMAMENT RESEARCH AND DEVELOPMENT CENTER
DOVER, NEW JERSEY 07801

DEPT OF THE ARMY
U.S. ARMY WEAPONS COMMAND
ROCK ISLAND, ILLINOIS, 61201

KEY,
BOLT CARRIER

SIZE	CODE IDENT NO.	DRAWING NO.
D	19204	8448506

SCALE 2/1 SHEET OF

DISTRIBUTION STATEMENT F: FURTHER DISTRIBUTION ONLY AS DIRECTED BY ASQNC-AR OR HIGHER DOD AUTHORITY; 92-06-22.

AMSWE Form 403D, 29 Jul 69

CDI

October 15, 2004 11:27 AM

DR448506