NOTICE: RESTRICTED AS TO USE AND DISCLOSURE

THIS ENTIRE DOCUMENT AND ALL INFORMATION THEREON IS PROPRIETARY TO COLT'S INC AND SHALL NOT BE REPRODUCED, DUPLICATED OR COPIED IN WHOLE OR IN PART, DISCLOSED OR MADE AVAILABLE TO ANY OTHER PERSON, FIRM, OR CORPORATION OR OTHERWISE USED EXCEPT TO THE EXTENT NECESSARY FOR AND THEN ONLY IN CONNECTION WITH THE PREPARATION AND / OR SUBMISSION OF BIDS OR PROPOSALS RELATED TO A PROCUREMENT BEING EFFECTED BY THE UNITED STATES GOVERNMENT OR IN CONNECTION WITH THE MANUFACTURE IN THE UNITED STATES EITHER BY THE UNITED STATES GOVERNMENT OR UNDER A CONTRACT WITH THE UNITED STATES GOVERNMENT. THIS DOCUMENT WILL BE DISPOSED OF IN ACCORDANCE WITH INSTRUCTIONS ISSUED BY THE RESPONSIBLE CONTRACTING OFFICER UPON COMPLETION OF THE PURPOSE FOR WHICH IT WAS ISSUED.

REVISIONS

MF	ZONE	LTR	DESCRIPTION	DATE	APPROVED
			REDRAWN FROM COLT'S DRAWING D62277 REV A	27 APR 70	
		A	(3) SEE EO HRD 02197-3	15 JULY 70	
		B	(5) SEE ERR HQR 10865	13 OCT 71	
		C	(2) SEE ERR HQR 20748	15 SEPT 72	
		D	NORW2S0020 82-06-09	83-02-03	
		E	NORW3S0011 83-03-09	83-11-08	
		F	NOR W6S0010 86-02-24	86-11-05	
		G	NOR G7S3018/870312	880114	
		H	NOR G1S3139/911004	911129	GK
		J	NOR G1S2054/920219	920415	RR

NOTE:

1. APPLY MIL-L-46000 AT ASSEMBLY OF B8448537 DETENT AND B8448538 SPRING. (A)
2. MIL-W-13855 APPLIES. (B)

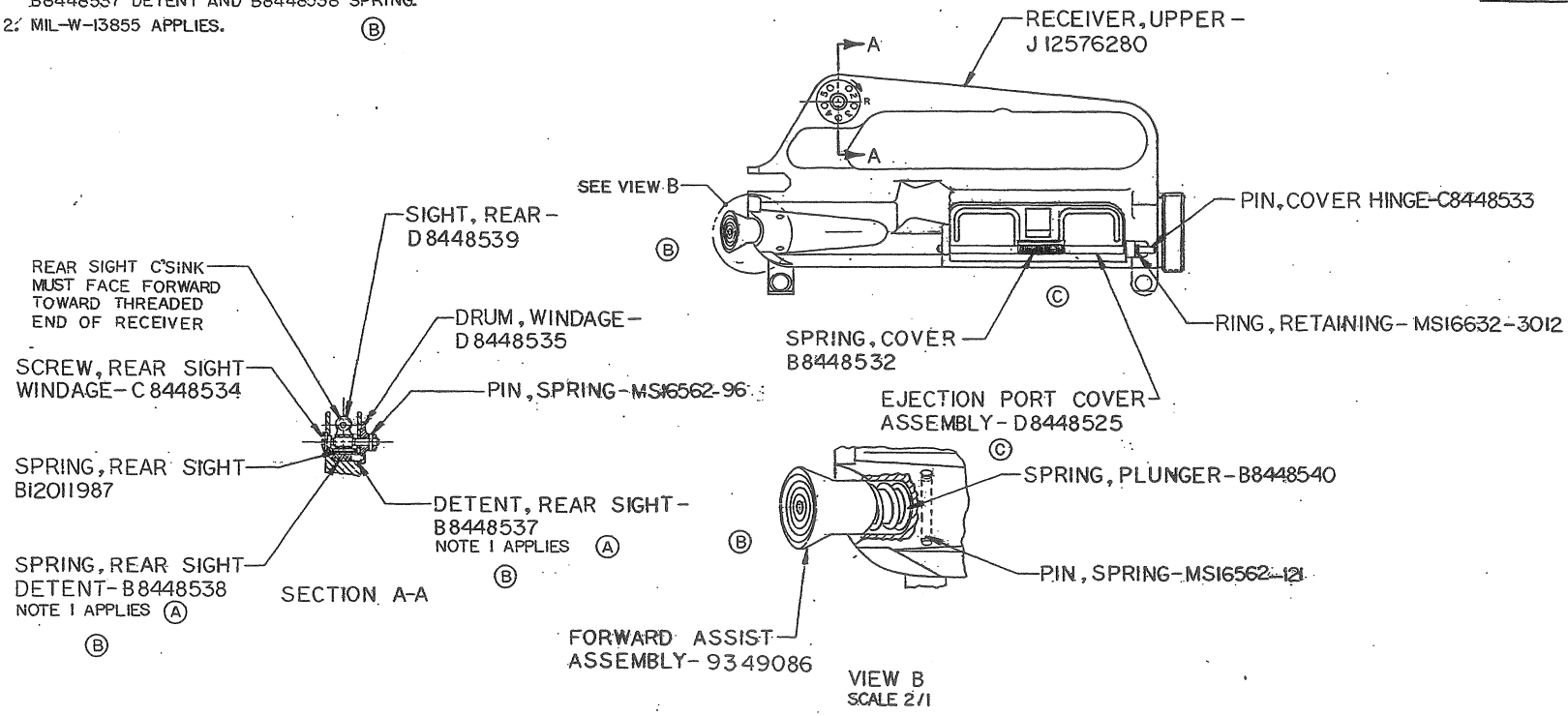

SEE SEPARATE PARTS LIST: 8448523

MECHANICAL PROPERTIES			
YS MIN			
YS MAX			
EL 2			
RA			
BH			
RH			

F8448522	1116A1
NEXT ASSY	USED ON
APPLICATION	

UNLESS OTHERWISE SPECIFIED DIMENSIONS ARE IN INCHES
TOLERANCES:
ANGLES ± ___
3 PLACE DECIMALS ± ___
2 PLACE DECIMALS ± ___

MATERIAL ___

FINAL PROTECTIVE FINISH ___

CONTRACT NO:

DATE 27 APR 1970

PREPARED
CHECKED
ENGINEER
SUBMITTED
APPROVED

FSCM NO. 19200

CURRENT

U S ARMY ARMAMENT RESEARCH AND DEVELOPMENT CENTER
DOVER, NEW JERSEY 07801

DEPT OF THE ARMY
U.S. ARMY WEAPONS COMMAND
ROCK ISLAND, ILLINOIS, 61201

UPPER RECEIVER ASSEMBLY

SIZE	CODE IDENT NO.	DRAWING NO.
D	19204	8448523

SCALE 1/1 SHEET OF

CDI

DISTRIBUTION STATEMENT F
FURTHER DISSEMINATION ONLY AS DIRECTED BY ARDEC, SMCAR-ESW, ROCK ISLAND, IL, ASOW-ARDEC, 9/10/75 OR HIGHER DoD AUTHORITY.

VE Form 403D, 29 Jul 69

October 13, 2004 3:07 PM

D8448523