NOTICE: RESTRICTED AS TO USE AND DISCLOSURE

THIS ENTIRE DOCUMENT AND ALL INFORMATION THEREON IS PROPRIETARY TO COLT'S INC AND SHALL NOT BE REPRODUCED, DUPLICATED OR COPIED IN WHOLE OR IN PART, DISCLOSED OR MADE AVAILABLE TO ANY OTHER PERSON, FIRM, OR CORPORATION OR OTHERWISE USED EXCEPT TO THE EXTENT NECESSARY FOR AND THEN ONLY IN CONNECTION WITH THE PREPARATION AND/OR SUBMISSION OF BIDS OR PROPOSALS RELATED TO A PROCUREMENT BEING EFFECTED BY THE UNITED STATES GOVERNMENT OR IN CONNECTION WITH THE MANUFACTURE IN THE UNITED STATES EITHER BY THE UNITED STATES GOVERNMENT OR UNDER A CONTRACT WITH THE UNITED STATES GOVERNMENT. THIS DOCUMENT WILL BE DISPOSED OF IN ACCORDANCE WITH INSTRUCTIONS ISSUED BY THE RESPONSIBLE CONTRACTING OFFICER UPON COMPLETION OF THE PURPOSE FOR WHICH IT WAS ISSUED.

REVISIONS

MF	ZONE	LTR	DESCRIPTION	DATE	APPROVED
			REDRAWN FROM COLT'S DRAWING D61574 REV C	27 APR 70	
		A	(4) SEE EO HRD 02197-3	15 JULY 70	
		B	(3) SEE EO HRD 02282	16 DEC 70	
		C	SEE ERR HQR 10797	6 JULY 71	
		D	(5) SEE ERR HQR 20778	6 OCT 72	
		E	SEE ERR HQR 50615	27 FEB 75	
		F	NACW2300026 82-05-21	83-02-03	
		G	NORW6S3006/86-03-12	87-02-17	
		H	ERR Z9Z1182AT (ECP W6S3034 860718)	890825	
		J	NOR G0S3094 900702	901022	
		K	NOR G5S3099 951002	960117	RLV
		L	NOR L9S3009 990514	991027	BAC

NOTE:

1. FINISH 125 EXCEPT AS NOTED.
2. FILLET RADII .010.
3. ALL DIAMETERS TO BE ⊚ A .010 DIA.
4. ALL DIMENSIONS APPLY BEFORE FINISH UNLESS OTHERWISE SPECIFIED.
5. FINISH MIL-A-8625, TYPE III, CLASS 2, FILM THICKNESS .0010±.0002, FINISH SHALL BE LUSTERLESS (FLAT), APPROX BLACK, NO. 37038, TABLE IX BUT NOT LIGHTER THAN GRAY, NO. 36076, TABLE VIII OF FED-STD-595, AND SEAL WITH 5% AQUEOUS SOLUTION OF SODIUM DICHROMATE IN ACCORDANCE WITH PARAGRAPH 3.8.2 ABRASION RESISTANCE: THE ANODIC COATING LOSS SHALL NOT EXCEED 20 MILLIGRAMS WHEN SUBJECTED TO A 5,000 CYCLE TEST.
6. MASK THREADS, APPLY DRY FILM LUBRICANT TO BOTH INTERIOR AND EXTERIOR. .0002/.0005 FILM THICKNESS. USE MIL-L-46010 CURED AT 300°/325° F FOR 2 HOURS OR EVERLUBE 626 OR 626S CURED AT 275° ± 25°F FOR ONE HOUR.
7. BREAK SHARP EDGES .005 + .010 UNLESS OTHERWISE SPECIFIED.
8. MIL-W-13855 APPLIES.

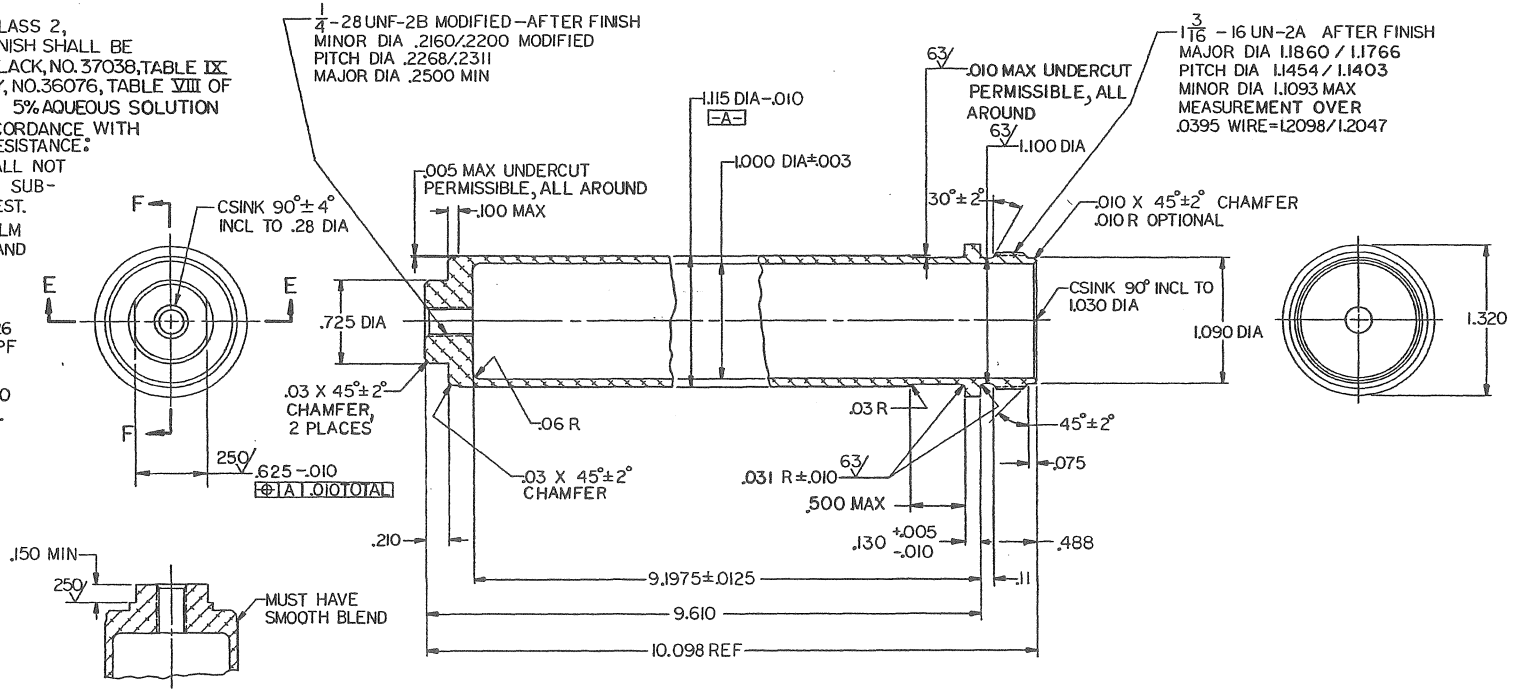

MECHANICAL PROPERTIES	
YS MIN	
YS MAX	
EL 2	
RA	
BH	
RH	

NEXT ASSY	USED ON
D9349101	M16A2
C8448605	M16
C8448579	M16A1

APPLICATION

UNLESS OTHERWISE SPECIFIED DIMENSIONS ARE IN INCHES
TOLERANCES:
ANGLES ± 1°
3 PLACE DECIMALS ±.005
2 PLACE DECIMALS ±.01

MATERIAL: ALUMINUM ALLOY, EXTRUDED, ALLOY 7075 TEMPER T6, ASTM B 221

FINAL PROTECTIVE FINISH: SEE NOTES 5 & 6

CONTRACT NO.

DATE 27 APR 1970

PREPARED / CHECKED / ENGINEER / SUBMITTED / APPROVED

CURRENT DESIGN ACTIVITY CAGE CODE 19200
U.S. ARMY
ARMAMENT RESEARCH, DEVELOPMENT AND ENGINEERING CENTER
PICATINNY ARSENAL, NEW JERSEY 07806-5000

DEPT OF THE ARMY
U.S. ARMY WEAPONS COMMAND
ROCK ISLAND, ILLINOIS, 61201

EXTENSION, RECEIVER

SIZE	CODE IDENT NO.	DRAWING NO.
D	19204	8448581

SCALE 2/1 SHEET 1 OF 1

D8448581

AMSWE Form 403D, 29 Jul 69

CDI

October 15, 2004 10:43 AM