DRAWING SIZE F

NOTICE: RESTRICTED AS TO USE AND DISCLOSURE

THIS ENTIRE DOCUMENT AND ALL INFORMATION IS PROPRIETARY TO COLT INC, AND SHALL NOT BE REPRODUCED, DUPLICATED OR COPIED IN WHOLE OR IN PART, DISCLOSED OR MADE AVAILABLE TO ANY OTHER PERSON, FIRM, OR CORPORATION, OR OTHERWISE USED EXCEPT TO THE EXTENT NECESSARY FOR AND THEN ONLY IN CONNECTION WITH THE PREPARATION CONNECTION WITH THE PREPARATION AND/OR SUBMISSION OF BIDS OR PROPOSALS RELATED TO A PROCUREMENT BEING EFFECTED BY THE UNITED STATES EITHER BY THE UNITED STATES GOVERNMENT OR UNDER CONTRACT WITH THE UNITED STATES GOVERNMENT. THIS DOCUMENT WILL BE DISPOSED OF IN ACCORDANCE WITH THE INSTRUCTIONS ISSUED BY THE RESPONSIBLE CONTRACTING OFFICER UPON COMPLETION OF THE PURPOSE FOR WHICH IT WAS ISSUED.

SPECIAL LICENSE RIGHTS
THE GOVERNMENT'S RIGHTS TO USE, MODIFY, REPRODUCE, RELEASE, PERFORM, DISPLAY, OR DISCLOSE THESE DATA ARE RESTRICTED BY CONTRACT NO. DAAF03-67-C-108, LICENSE NO. DAAF03-67-C-108. ANY REPRODUCTION OF TECHNICAL DATA OR PORTIONS THEREOF MARKED WITH THIS LEGEND MUST ALSO REPRODUCE THE MARKINGS.

DUE TO GOVERNMENT GENERATED ENGINEERING CHANGES, THERE MAY BE DATA AND/OR TOLERANCES NOT PROPRIETARY TO COLT'S.

REVISIONS

MODEL REV	DRAWING REV	DESCRIPTION	DATE(YEAR-MO-DA)	APPROVED
N/A	H	NOR G253102 / 1992-11-10	1993-01-28	
N/A	J	NOR G3S3009 / 1993-03-03	1993-04-01	
N/A	K	NOR G6S3117 / 1996-07-19	1996-12-04	FET
-	L	NOR L2S2102 / 2001-08-23	2001-09-26	RLV
-	M	NOR L2S3044 / 2002-08-28	2002-10-22	JJW
A	N	NOR L3S3161 / 2004-03-31	2004-08-13	RLV

NOTES

1. STEEL, INVESTMENT CASTING, CMPSN IC 4620 OR IC 8620, SPEC MIL-S-22141, EXCEPT THAT MANGANESE CONTENT SHALL BE .70 TO 1.20%. (401 Y)
2. ALL DIMENSIONS ARE BEFORE FINAL PROTECTIVE FINISH EXCEPT THOSE DEFINING -C-.
3. FILLET RADII .026+.010 UNLESS OTHERWISE SPECIFIED.
4. EDGE RADII .005 TO .036 UNLESS OTHERWISE SPECIFIED.
5. -A- ESTABLISHED BY -F- AND .9140 DATUM DIMENSION.
6. CLASSIFICATION AND INSPECTION OF CASTING TO BE IN ACCORDANCE WITH AMS-STD-2175, CLASS 2, GRADE A.
7. CARBURIZE TO PRODUCE A TOTAL CASE DEPTH OF .014+.004. (407 Y) CASE DEPTH
8. .009 MIN CASE DEPTH REQUIRED IF SURFACE IS MACHINED AFTER HEAT TREATMENT.
9. NO FINAL PROTECTIVE FINISH IN THIS AREA. COAT WITH LUBRICATING OIL PER MIL-L-46000 OR MIL-L-63460. (405 Y) LUBE OIL
10. FINISH 125/ EXCEPT AS NOTED.
11. BREAK ALL SHARP EDGES PRODUCED BY MACHINING .005+.010 UNLESS OTHERWISE SPECIFIED.
12. ALL FILLET RADII PRODUCED BY MACHINING .003+.012 UNLESS OTHERWISE SPECIFIED.
13. PARTING LINE .005 MAX MISMATCH.
14. MIL-W-13855 APPLIES.
15. GRIND -C- AFTER HEAT TREAT AND FINAL PROTECTIVE FINISH, DIRECTION OF GRIND // -F- MAX METAL REMOVED BY GRINDING 0.005.
16. FINAL PROTECTIVE FINISH: 5.3.1.2 OF MIL-STD-171. (214 II V) PROTECTIVE COATING (402 Y)
17. ROCKWELL 15N 89-91 HARDNESS (101 III C)
18. QUALITY ASSURANCE PROVISION REQUIREMENTS PER DRAWINGS 12993884 APPLY.

215 II C — WORKMANSHIP
404 Y — RADIOGRAPHIC INSPECTION
403 Y — SUPPLEMENTARY OIL
406 Y — MAGNETIC PARTICLE INSPECTION
505 Z — CASE DEPTH HARDNESS

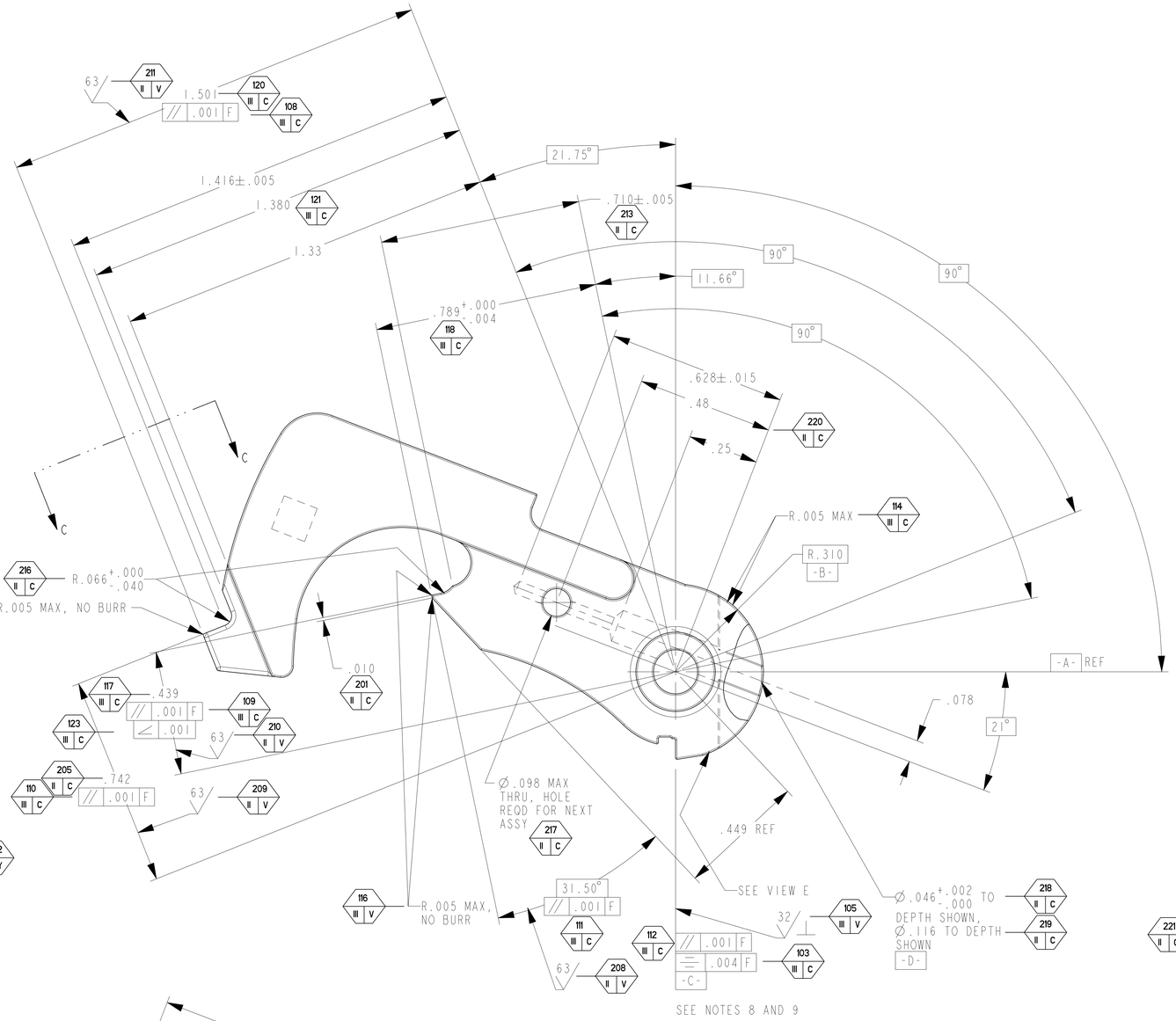

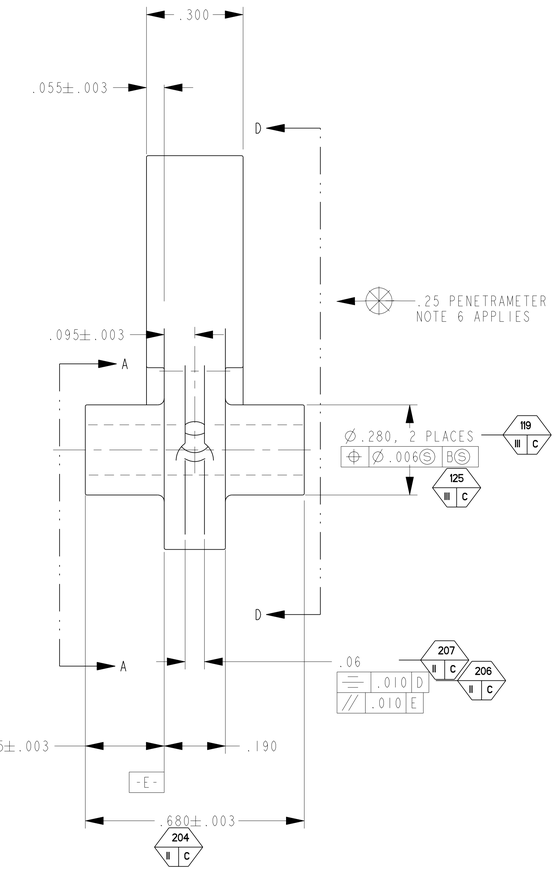

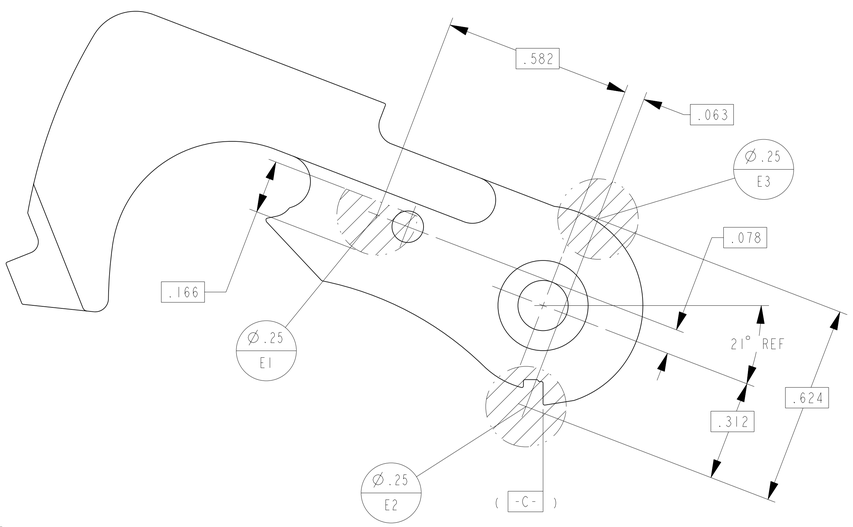

VIEW E
DATUM TARGET LOCATION

DISTRIBUTION STATEMENT F: FURTHER DISTRIBUTION ONLY AS DIRECTED BY US ARMY; ARDEC, AMSTA-AR-CCL-F, ROCK ISLAND, IL; 1993-09-14.

REV STATUS OF SHEETS	REV	N	N
	SHEET	1	2

CURRENT DESIGN ACTIVITY CAGE CODE 19200
US ARMY
ARMAMENT RESEARCH, DEVELOPMENT AND ENGINEERING CENTER
PICATINNY ARSENAL, NEW JERSEY 07806-5000

THIS DRAWING WAS GENERATED FROM A SOLID MODEL AND IS CAD MAINTAINED. CHANGES SHALL BE INCORPORATED BY THE DESIGN ACTIVITY.

PART NO. 8448613

PMIC			DO NOT SCALE DRAWING
MECHANICAL PROPERTIES			UNLESS OTHERWISE SPECIFIED DIMENSIONS ARE IN INCHES
YP			TOLERANCES ON ANGLES ± °
TS			2 PLACE DECIMALS ± .01
EL2			3 PLACE DECIMALS ± .005
RA		M16A1	THIRD ANGLE PROJECTION
BH	C8448612	M16	
RH	NEXT ASSY	USED ON	MATL ENGR / MODELED BY J.MACON-ESERV
	APPLICATION		

CONTRACT NUMBER			DESIGN ACTIVITY US ARMY ROCK ISLAND ARSENAL ROCK ISLAND, ILLINOIS
CONTRACTOR			HAMMER
DRAWN BY K.JOHNSON-ESERV	DATE (YEAR-MO-DA) 1970-04-27		
CHECKER J.WINDHAM	ENGINEER J.WINDHAM		
ENGINEER L.KO	QUALITY ENGINEER E.SESE		
DRAWING APPROVAL L.BRUNTON	2002-08-28		SIZE F / CAGE CODE 19204 / DWG NO. 8448613
DESIGN APPROVAL R.ELBE	2002-08-28		SCALE 4/1 / UNIT WT. 0.072 / SHEET 1 OF 2

FORMAT: F_TACOM_ENG_1.0

DRAWING SIZE F

NOTICE: RESTRICTED AS TO USE AND DISCLOSURE

THIS ENTIRE DOCUMENT AND ALL INFORMATION IS PROPRIETARY TO COLT INC. AND SHALL NOT BE REPRODUCED, DUPLICATED OR COPIED IN WHOLE OR IN PART, DISCLOSED OR MADE AVAILABLE TO ANY OTHER PERSON, FIRM, OR CORPORATION OR OTHERWISE USED EXCEPT TO THE EXTENT NECESSARY FOR AND THEN ONLY IN CONNECTION WITH THE PREPARATION CONNECTION WITH THE PREPARATION AND/OR SUBMISSION OF BIDS OR PROPOSALS RELATED TO A PROCUREMENT BEING EFFECTED BY THE UNITED STATES EITHER BY THE UNITED STATES GOVERNMENT OR UNDER CONTRACT WITH THE UNITED STATES GOVERNMENT. THIS DOCUMENT WILL BE DISPOSED OF IN ACCORDANCE WITH THE INSTRUCTIONS ISSUED BY THE RESPONSIBLE CONTRACTING OFFICER UPON COMPLETION OF THE PURPOSE FOR WHICH IT WAS ISSUED.

SPECIAL LICENSE RIGHTS
THE GOVERNMENT'S RIGHTS TO USE, MODIFY, REPRODUCE, RELEASE, PERFORM, DISPLAY, OR DISCLOSE THESE DATA ARE RESTRICTED BY CONTRACT NO. DAAF03-67-C-108, LICENSE NO. DAAF03-67-C-108. ANY REPRODUCTION OF TECHNICAL DATA OR PORTIONS THEREOF MARKED WITH THIS LEGEND MUST ALSO REPRODUCE THE MARKINGS.

DUE TO GOVERNMENT GENERATED ENGINEERING CHANGES, THERE MAY BE DATA AND/OR TOLERANCES NOT PROPRIETARY TO COLT'S.

REVISIONS

MODEL REV	DRAWING REV	DESCRIPTION	DATE(YEAR-MO-DA)	APPROVED
N/A	H	NOR G253102 / 1992-11-10	1993-01-28	
N/A	J	NOR G3S3009 / 1993-03-03	1993-04-01	
N/A	K	NOR G6S3117 / 1996-07-19	1996-12-04	FET
-	L	NOR L2S2102 / 2001-08-23	2001-09-26	RLV
-	M	NOR L2S3044 / 2002-08-28	2002-10-22	JJW
A	N	NOR L3S3161 / 2004-03-31	2004-08-13	RLV

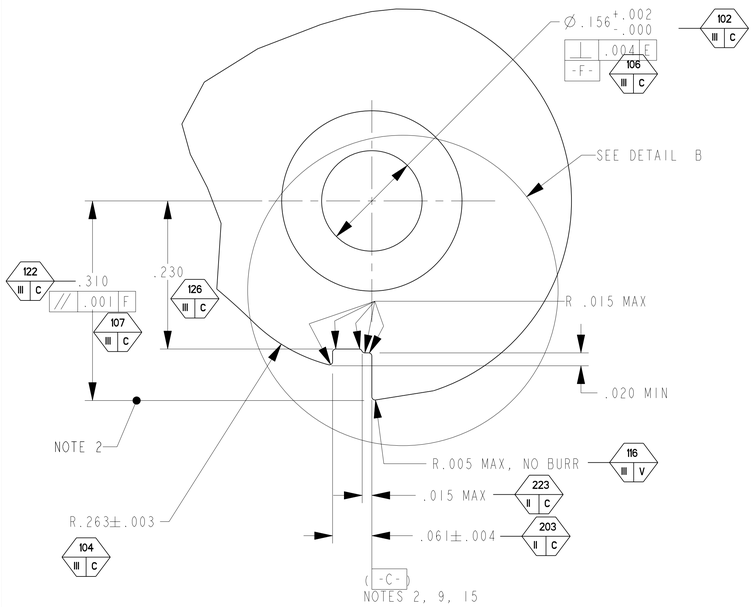

SECTION A-A
SCALE 10.000

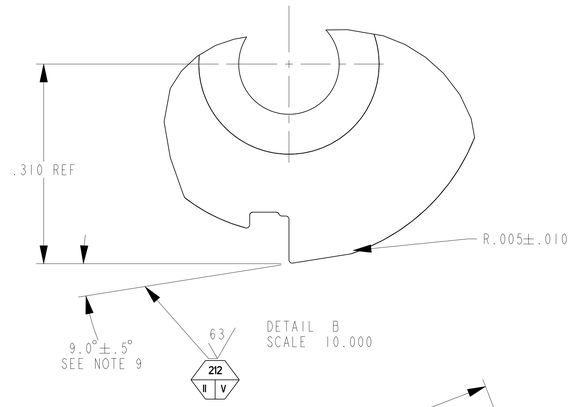

DETAIL B
SCALE 10.000

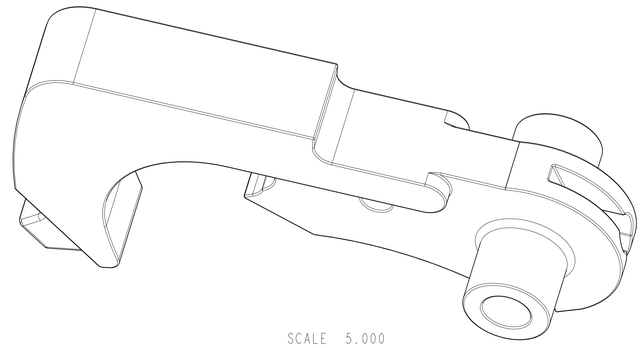

SCALE 5.000

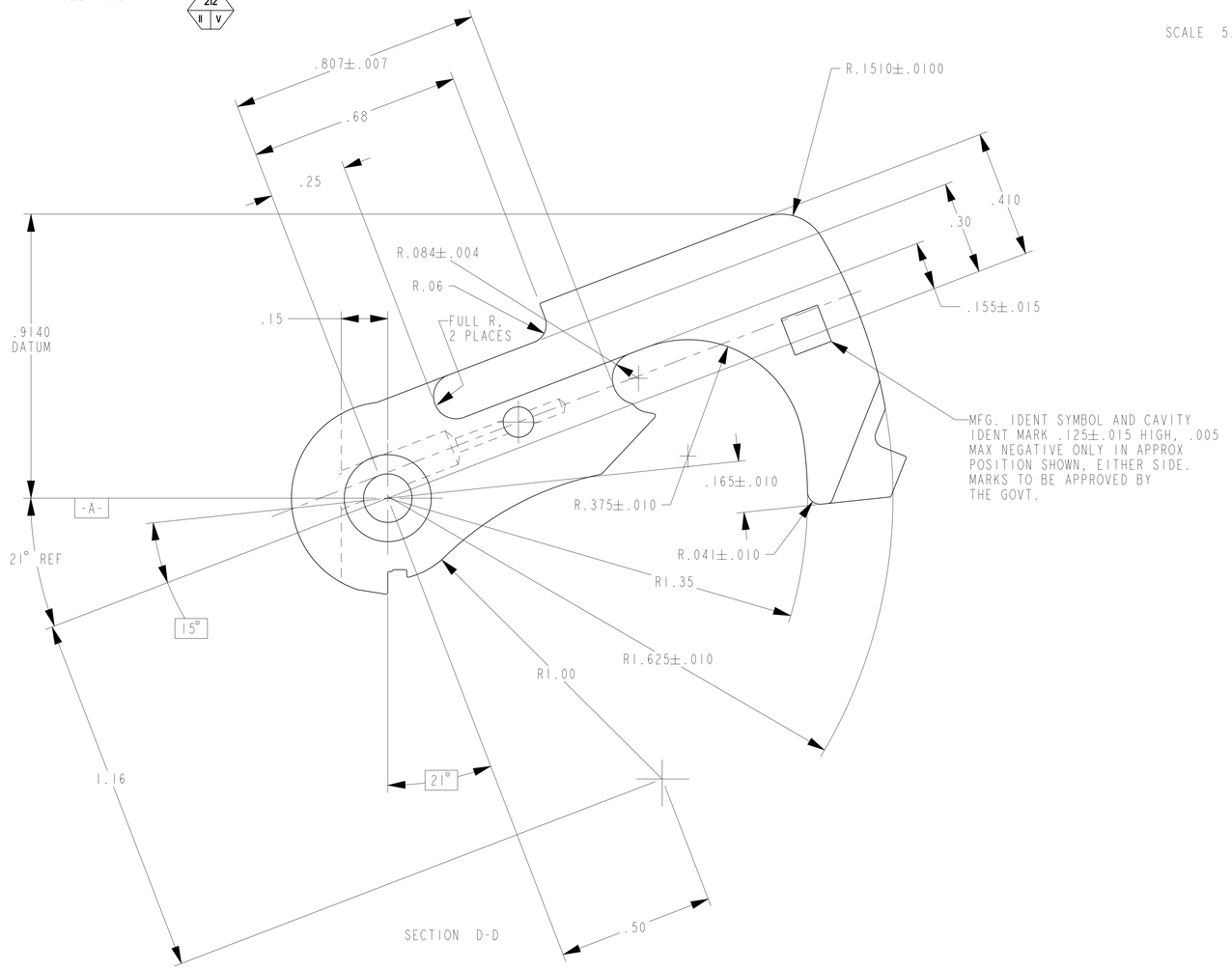

SECTION D-D

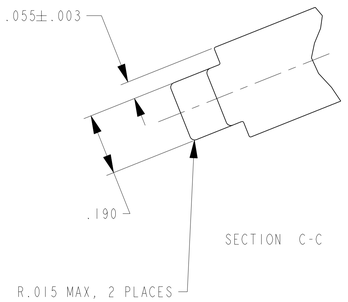

SECTION C-C

THIS DRAWING WAS GENERATED FROM A SOLID MODEL AND IS CAD MAINTAINED. CHANGES SHALL BE INCORPORATED BY THE DESIGN ACTIVITY.

CURRENT DESIGN ACTIVITY CAGE CODE 19200
US ARMY
ARMAMENT RESEARCH, DEVELOPMENT AND ENGINEERING CENTER
PICATINNY ARSENAL, NEW JERSEY 07806-5000

PART NO. 8448613

PMIC			DO NOT SCALE DRAWING	CONTRACT NUMBER	DESIGN ACTIVITY: US ARMY ROCK ISLAND ARSENAL ROCK ISLAND, ILLINOIS
MECHANICAL PROPERTIES			UNLESS OTHERWISE SPECIFIED DIMENSIONS ARE IN INCHES	CONTRACTOR	
YP			TOLERANCES ON ANGLES ± ° 2 PLACE DECIMALS ± .01 3 PLACE DECIMALS ±.005	DRAWN BY K.JOHNSON-ESERV; DATE (YEAR-MO-DA) 1970-04-27	HAMMER
TS			THIRD ANGLE PROJECTION	CHECKER J.WINDHAM; ENGINEER J.WINDHAM	
EL2		M16A1		ENGINEER L.KO; QUALITY ENGINEER E.SESE	
RA				DRAWING APPROVAL L.BRUNTON 2002-08-28	SIZE F; CAGE CODE 19204; DWG NO. 8448613
BH		C8448612	M16		
RH	I5N 89-91	NEXT ASSY	USED ON	MATL ENGR; MODELED BY J.MACON-ESERV	DESIGN APPROVAL R.ELBE 2002-08-28
		APPLICATION			SCALE 4/1; UNIT WT. 0.072; SHEET 2 OF 2

DISTRIBUTION STATEMENT F: FURTHER DISTRIBUTION ONLY AS DIRECTED BY US ARMY; ARDEC, AMSTA-AR-CCL-F, ROCK ISLAND, IL; 1993-09-14.

FORMAT: F_TACOM_ENG_1.0