DRAWING SIZE D

NOTICE: RESTRICTED AS TO USE AND DISCLOSURE

THIS ENTIRE DOCUMENT AND ALL INFORMATION IS PROPRIETARY TO COLT INC. AND SHALL NOT BE REPRODUCED, DUPLICATED OR COPIED IN WHOLE OR IN PART, DISCLOSED OR MADE AVAILABLE TO ANY OTHER PERSON, FIRM, OR CORPORATION OR OTHERWISE USED EXCEPT TO THE EXTENT NECESSARY FOR AND THEN ONLY IN CONNECTION WITH THE PREPARATION CONNECTION WITH THE PREPARATION AND/OR SUBMISSION OF BIDS OR PROPOSALS RELATED TO A PROCUREMENT BEING EFFECTED BY THE UNITED STATES EITHER BY THE UNITED STATES GOVERNMENT OR UNDER CONTRACT WITH THE UNITED STATES GOVERNMENT. THIS DOCUMENT WILL BE DISPOSED OF IN ACCORDANCE WITH THE INSTRUCTIONS ISSUED BY THE RESPONSIBLE CONTRACTING OFFICER UPON COMPLETION OF THE PURPOSE FOR WHICH IT WAS ISSUED.

SPECIAL LICENSE RIGHTS
THE GOVERNMENT'S RIGHTS TO USE, MODIFY, REPRODUCE, RELEASE, PERFORM, DISPLAY, OR DISCLOSE THESE DATA ARE RESTRICTED BY CONTRACT NO. DAAF03-67-C-108, LICENSE NO. DAAF03-67-C-108. ANY REPRODUCTION OF TECHNICAL DATA OR PORTIONS THEREOF MARKED WITH THIS LEGEND MUST ALSO REPRODUCE THE MARKINGS.

DUE TO GOVERNMENT GENERATED ENGINEERING CHANGES, THERE MAY BE DATA AND/OR TOLERANCES NOT PROPRIETARY TO COLT'S.

REVISIONS

MODEL REV	DRAWING REV	DESCRIPTION	DATE(YEAR-MO-DA)	APPROVED
N/A	A	NOR W9S2003 / 1980-02-13	1980-05-16	
N/A	B	NOR G9S3045 / 1989-07-31	1989-11-30	
N/A	C	NOR G1S2018 / 1991-07-08	1991-10-11	
N/A	D	NOR L1S2102 / 2001-08-23	2001-09-26	RLV
-	E	NOR L1S3048 / 2001-09-25	2002-05-22	JJW
A	F	NOR L3S3161 / 2004-03-31	2004-08-13	RLV

NOTES

1. APPLICABLE STANDARDS/SPECIFICATIONS:
   A. MIL-W-13855.
2. MATERIAL: STEEL, CMPSN 1045 TO 1055, ANNEALED, COLD ROLLED STRIP, NO 2 FINISH, SPEC AMS-QQ-S-700.
3. BREAK ALL SHARP EDGES R.005 $^{+.005}_{-.000}$.
4. HEAT TREATMENT: AUSTEMPER TO RH 15N 78.5/81.5
5. QUALITY ASSURANCE PROVISION REQUIREMENTS PER DRAWING 12993884 APPLY.

401 Y — MATERIAL

402 W — HEAT TREATMENT

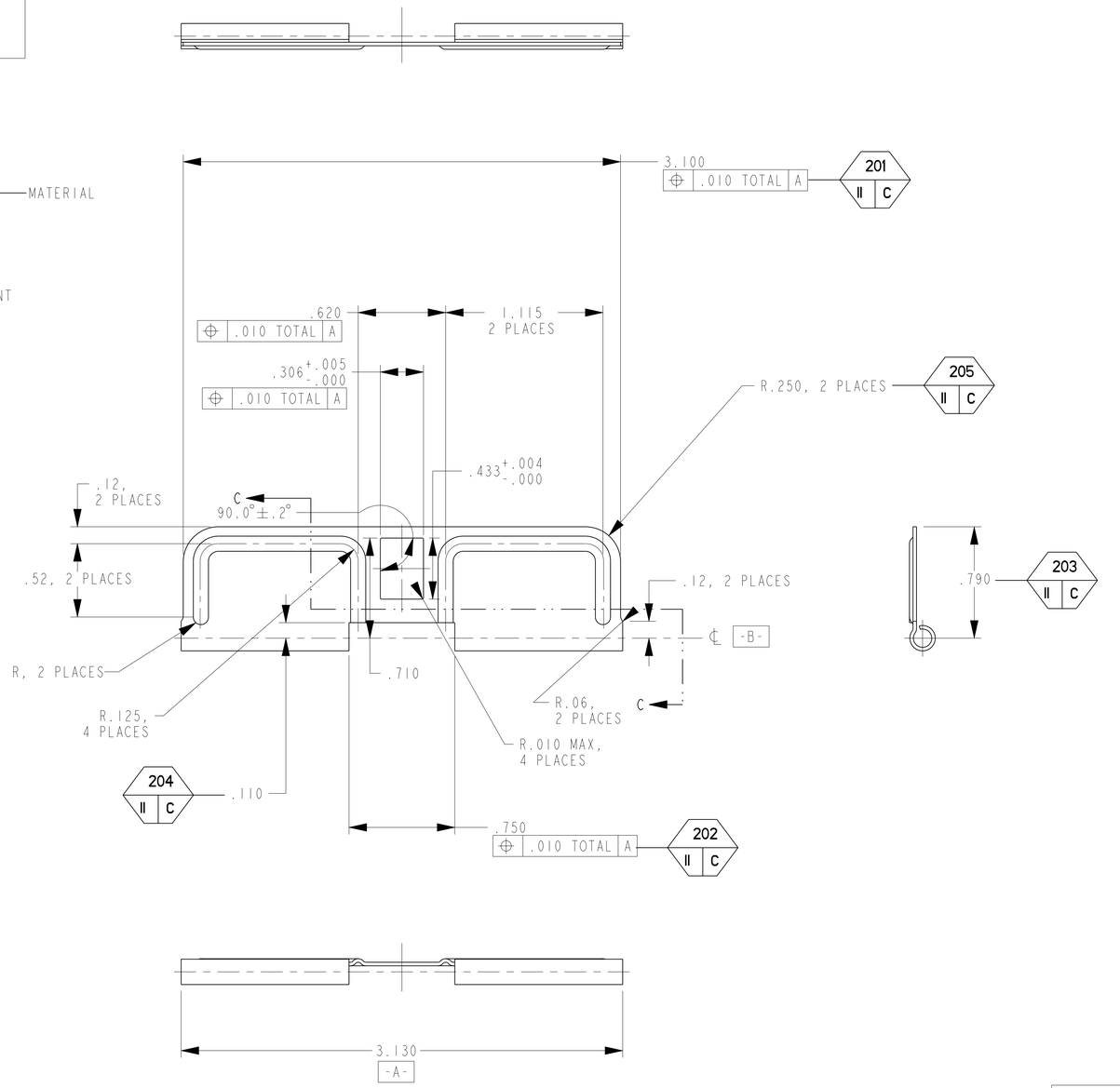

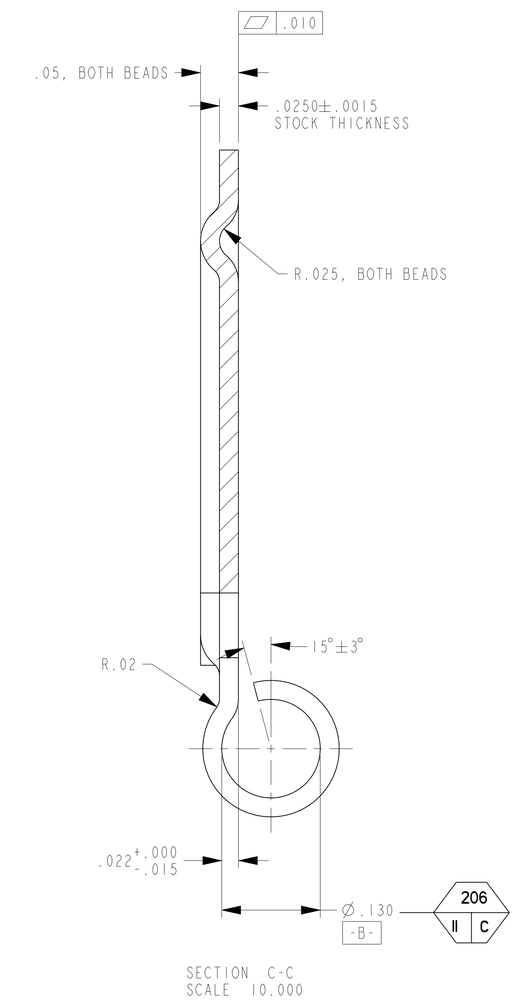

SECTION C-C
SCALE 10.000

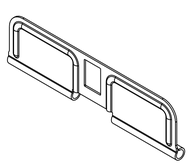

ISO VIEW
SCALE 1.000

THIS DRAWING WAS GENERATED FROM A SOLID MODEL AND IS CAD MAINTAINED. CHANGES SHALL BE INCORPORATED BY THE DESIGN ACTIVITY.

CURRENT DESIGN ACTIVITY CAGE CODE 19200
US ARMY
ARMAMENT RESEARCH, DEVELOPMENT AND ENGINEERING CENTER
PICATINNY ARSENAL, NEW JERSEY 07806-5000

PART NO. 8448785

PMIC			
MECHANICAL PROPERTIES			
YP			
TS			
EL2			
RA			
BH			
RH			
		M23I	
		M4AI	
		M4	
		MI6A4	
		MI6A3	
	8448525	MI6A2	
	8448783	MI6/MI6AI	
	NEXT ASSY	USED ON	
	APPLICATION		

DO NOT SCALE DRAWING

UNLESS OTHERWISE SPECIFIED DIMENSIONS ARE IN INCHES

TOLERANCES ON ANGLES ± °
2 PLACE DECIMALS ± .01
3 PLACE DECIMALS ± .005

THIRD ANGLE PROJECTION

MATL ENGR

MODELED BY S. GALL - ESERV

CONTRACT NUMBER

CONTRACTOR

DRAWN BY S. GALL - ESERV	DATE(YEAR-MO-DA) 1972-09-15
CHECKER G. STRAHL	ENGINEER J. WINDHAM
ENGINEER L. KO	QUALITY ENGINEER L. CICHUCKI
DRAWING APPROVAL L. BRUNTON	2001-09-25
DESIGN APPROVAL R. ELBE	2001-09-25

DESIGN ACTIVITY
US ARMY
ROCK ISLAND ARSENAL
ROCK ISLAND, ILLINOIS

COVER, EJECTION PORT

SIZE	CAGE CODE	DWG NO.
D	19204	8448785

SCALE 2.000 | UNIT WT. 0.023 | SHEET 1 OF 1

DISTRIBUTION STATEMENT F: FURTHER DISTRIBUTION ONLY AS DIRECTED BY US ARMY ARDEC; AMSTA-AR-CCL-F, ROCK ISLAND, IL; 1993-09-14.

FORMAT: D_TACOM_ENG_1_0