DRAWING SIZE F

NOTICE: RESTRICTED AS TO USE AND DISCLOSURE

THIS ENTIRE DOCUMENT AND ALL INFORMATION IS PROPRIETARY TO COLT INC. AND SHALL NOT BE REPRODUCED, DUPLICATED OR COPIED IN WHOLE OR IN PART, DISCLOSED OR MADE AVAILABLE TO ANY OTHER PERSON, FIRM, OR CORPORATION OR OTHERWISE USED EXCEPT TO THE EXTENT NECESSARY FOR AND THEN ONLY IN CONNECTION WITH THE PREPARATION CONNECTION WITH THE PREPARATION AND/OR SUBMISSION OF BIDS OR PROPOSALS RELATED TO A PROCUREMENT BEING EFFECTED BY THE UNITED STATES EITHER BY THE UNITED STATES GOVERNMENT OR UNDER CONTRACT WITH THE UNITED STATES GOVERNMENT. THIS DOCUMENT WILL BE DISPOSED OF IN ACCORDANCE WITH THE INSTRUCTIONS ISSUED BY THE RESPONSIBLE CONTRACTING OFFICER UPON COMPLETION OF THE PURPOSE FOR WHICH IT WAS ISSUED.

SPECIAL LICENSE RIGHTS
THE GOVERNMENT'S RIGHTS TO USE, MODIFY, REPRODUCE, RELEASE, PERFORM, DISPLAY, OR DISCLOSE THESE DATA ARE RESTRICTED BY CONTRACT NO. DAAF03-67-C-108, LICENSE NO. DAAF03-67-C-108. ANY REPRODUCTION OF TECHNICAL DATA OR PORTIONS THEREOF MARKED WITH THIS LEGEND MUST ALSO REPRODUCE THE MARKINGS.

DUE TO GOVERNMENT GENERATED ENGINEERING CHANGES, THERE MAY BE DATA AND/OR TOLERANCES NOT PROPRIETARY TO COLT'S.

REVISIONS

MODEL REV	DRAWING REV	DESCRIPTION	DATE(YEAR-MO-DA)	APPROVED
N/A	E	NOR G9S2087 / 1989-09-28	1989-12-07	
N/A	F	NOR G9S3135 / 1989-11-17 (ECP GOS3077 / 1990-06-04)	1990-08-01	
N/A	G	NOR G1S2018 / 1991-07-08	1991-10-11	
-	H	NOR L2S3069 / 2002-12-05	2003-01-15	JJW
A	J	NOR L0B53013 / 2008-03-25	2008-04-23	BMG

NOTES

1. APPLICABLE SPECIFICATIONS AND STANDARDS:
   A. ANSI Y14.5-1973
   B. MIL-W-13855
2. MATERIAL:
   A. REAR SIGHT BASE (CASTING) PER DRAWING NUMBER 9349088.
   OR
   B. MIM-8620 PER DRAWING NUMBER 13011863.
   ALL NON-CASTING-SPECIFIC DIMENSIONAL AND MARKING REQUIREMENTS PER DRAWING NUMBER 12951027 APPLY.
   OR
   C. AISI 8620 PER AMS 6274.
   ALL NON-CASTING-SPECIFIC DIMENSIONAL AND MARKING REQUIREMENTS PER DRAWING NUMBER 12951027 APPLY.
3. PROTECTIVE FINISH: FINISH 5.3.1.2 OF MIL-STD-171.
4. ALL DIMENSIONS APPLY BEFORE FINAL PROTECTIVE FINISH.
5. FILLET RADII SHALL BE R.015$^{+.000}_{-.012}$ EXCEPT AS NOTED.
6. END OF THREAD RADIALLY SHALL BE SUCH THAT THE LAST FULL CREST SHALL BE IN AREA SHOWN.
7. BREAK EDGES .005$^{+.010}_{-.000}$ EXCEPT AS NOTED.
8. HEAT TREATMENT: CARBURIZE TO PRODUCE A TOTAL CASE DEPTH OF .006 TO .010 AND HARDNESS EQUIVALENT TO ROCKWELL 15N 89.5 TO 91.5.
9. SURFACE FINISH: 125 EXCEPT AS NOTED.
10. QUALITY ASSURANCE PROVISION REQUIREMENTS PER DRAWING NUMBER 12993884 APPLY.

401 Y — MATERIAL (OPTIONS B AND C)
402 Y — PROTECTIVE FINISH
102 III V — LAST FULL CREST

101 III V — MISSING OR INCORRECT LETTERS AND ARROWS
223 II V — MISSING OR DEFECTIVE PROTECTIVE FINISH
224 II V — WORKMANSHIP
501 Z — HARDNESS
502 Z — SALT SPRAY TEST
503 Z — COATING WEIGHT
504 Z — SUPPLEMENTARY OIL TREATMENT, SALT SPRAY TEST
505 Z — CASE DEPTH

ISOMETRIC VIEW
SCALE 1.000

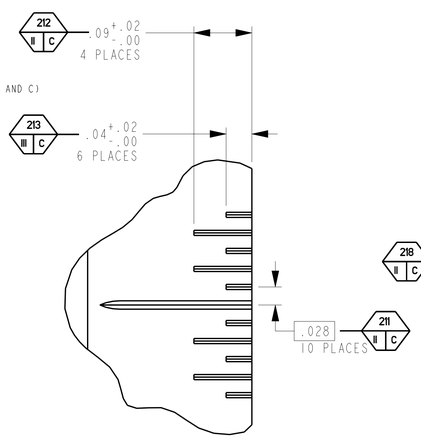

(PARTIAL PROJECTION VIEW)

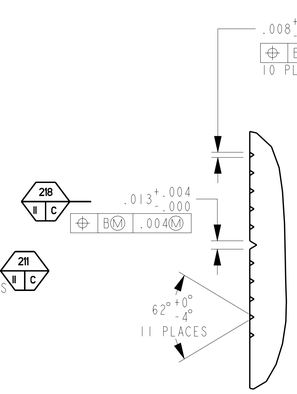

DETAIL G
SCALE 10.000

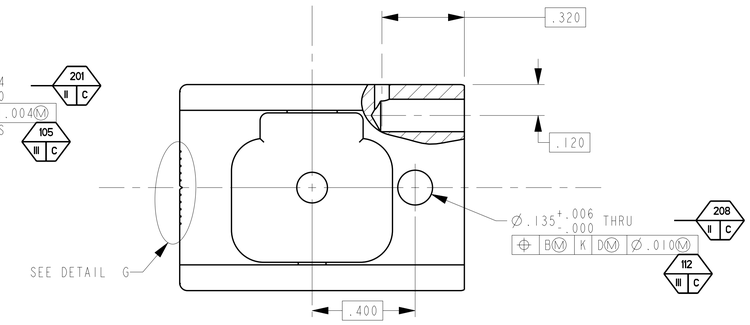

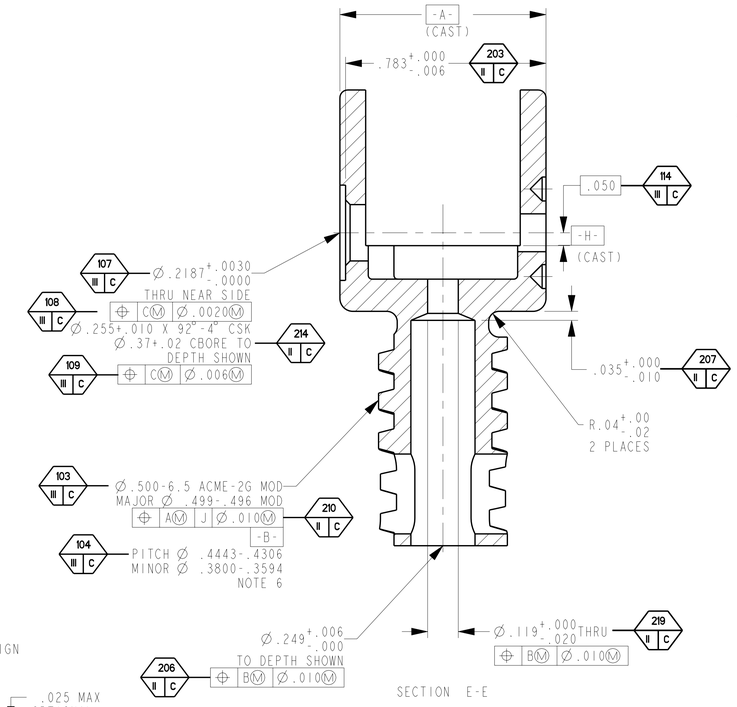

SECTION E-E

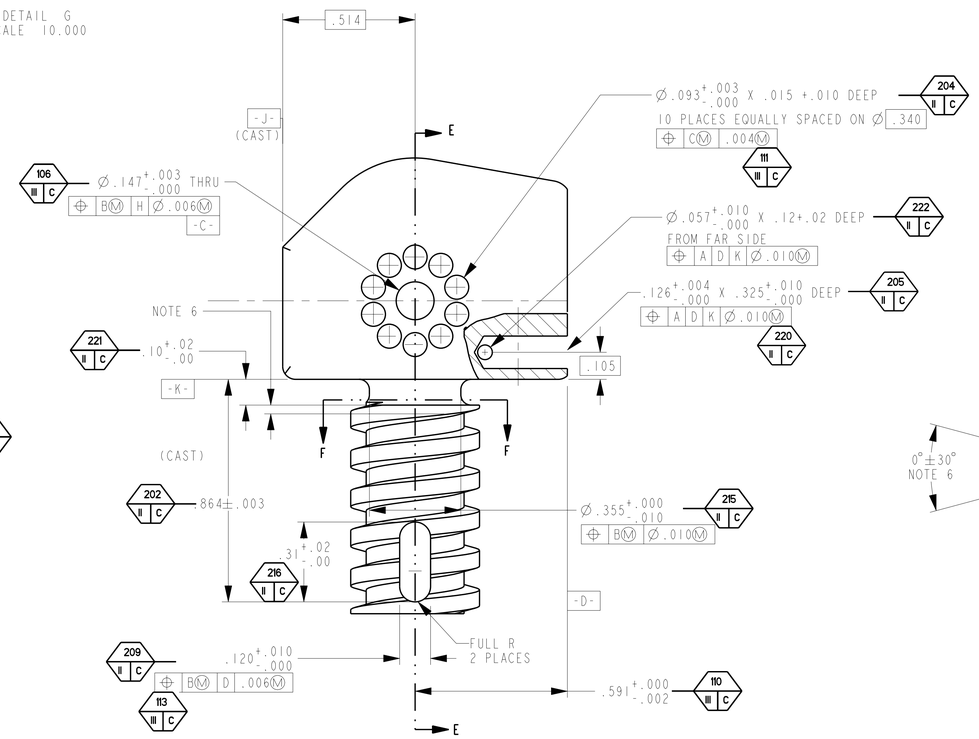

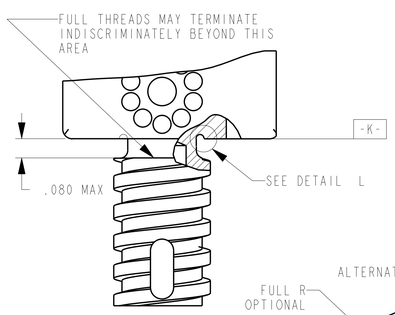

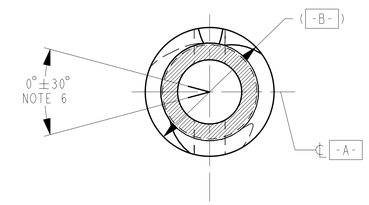

SECTION F-F

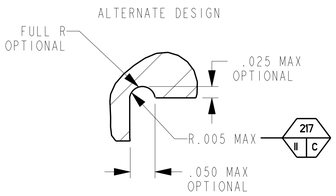

DETAIL L
SCALE 10.000

THIS DRAWING WAS GENERATED FROM A SOLID MODEL AND IS CAD MAINTAINED. CHANGES SHALL BE INCORPORATED BY THE DESIGN ACTIVITY.

PART NO. 9349074

PMIC			DO NOT SCALE DRAWING	CONTRACT NUMBER	DESIGN ACTIVITY US ARMY ARMAMENT RESEARCH, DEVELOPMENT AND ENGINEERING CENTER PICATINNY ARSENAL, NEW JERSEY 07806-5000
MECHANICAL PROPERTIES			UNLESS OTHERWISE SPECIFIED DIMENSIONS ARE IN INCHES	CONTRACTOR	BASE, REAR SIGHT
YP			TOLERANCES ON ANGLES ± 2° 2 PLACE DECIMALS ± .01 3 PLACE DECIMALS ± .005	DRAWN BY G. STRAHL — DATE (YEAR-MO-DA) 1982-06-09	
TS			THIRD ANGLE PROJECTION	CHECKER K. JOHNSON - ESERV — ENGINEER J. WINDHAM	
EL2				ENGINEER L. KO — QUALITY ENGINEER E. SESE	
RA				DRAWING APPROVAL L. BRUNTON 2002-11-27	SIZE F — CAGE CODE 19200 — DWG NO. 9349074
BH	9349072	M16A2	MATL ENGR	MODELED BY G. STRAHL	DESIGN APPROVAL R. ELBE 2002-11-27	SCALE 3.000 — UNIT WT. 0.105 — SHEET 1 OF 1
RH	NEXT ASSY	USED ON			
	APPLICATION				

DISTRIBUTION STATEMENT F. FURTHER DISTRIBUTION ONLY AS DIRECTED BY US ARMY; ARDEC; AMSTA-AR-CCL-F, ROCK ISLAND, IL; 1993-09-14.

FORMAT: F_TACOM_ENG.1.0