DRAWING SIZE C
(ARRADCOMR 70-12)

NOTICE: RESTRICTED AS TO USE AND DISCLOSURE
THIS ENTIRE DOCUMENT AND ALL INFORMATION THEREON IS PROPRIETARY TO COLTS IRC AND SHALL NOT BE REPRODUCED, DUPLICATED OR COPIED IN WHOLE OR IN PART, DISCLOSED OR MADE AVAILABLE TO ANY OTHER PERSON, FIRM OR CORPORATION OR OTHERWISE USED EXCEPT TO THE EXTENT NECESSARY FOR AND THEN ONLY IN CONNECTION WITH THE PREPARATION AND/OR SUBMISSION OF BIDS OR PROPOSALS RELATED TO A PROCUREMENT BEING EFFECTED BY THE UNITED STATES GOVERNMENT OR IN CONNECTION WITH THE MANUFACTURE IN THE UNITED STATES EITHER BY THE UNITED STATES GOVERNMENT OR UNDER A CONTRACT WITH THE UNITED STATES GOVERNMENT. THIS DOCUMENT WILL BE DISPOSED OF IN ACCORDANCE WITH INSTRUCTIONS ISSUED BY THE RESPONSIBLE CONTRACTING OFFICER UPON COMPLETION OF THE PURPOSE FOR WHICH IT WAS ISSUED.

REVISIONS

SYM	DESCRIPTION	DATE	APPROVAL
—	PRODUCTION RELEASE ERR W2S2013	820614	
A	NOR W2S0011/82-04-13 (ECP W3S3120/83-07-07	83-11-04	
B	NOR W2S3258/82-12-30 (ECP W3S3151/ 83-11-14)	840904	
C	NOR W4S0030/84-11-15	850402	
D	NOR G1S2018 91 07 08	91-10-11	

NOTES:—

1—SPEC. MIL-W-13855 AND ANSI Y14.5-73 APPLY.

2—MATERIAL:—WIRE, STAINLESS STEEL, TYPE 631 (17-7PH), COLD DRAWN, ASTM A313.

3—WIRE DIAMETER — .032—.001 .

4—DIRECTION OF HELIX - RIGHT HAND.

5—TOTAL COILS — 3.5 REF.

6—PITCH— CLOSE WOUND.

7—BREAK SHARP EDGES .003+.012 .

8—FINISH 63√ ALL SURFACES.

9—STRESS RELIEVE AND PRECIPITATION HARDEN AFTER FORMING. HOLD AT 900°F ± 10°F FOR ONE HOUR, AIR COOL.

10—HARDNESS EQUIV TO ROCKWELL C 48 MIN.

11—PROTECTIVE FINISH:—5.4.1 OF MIL-STD-171.

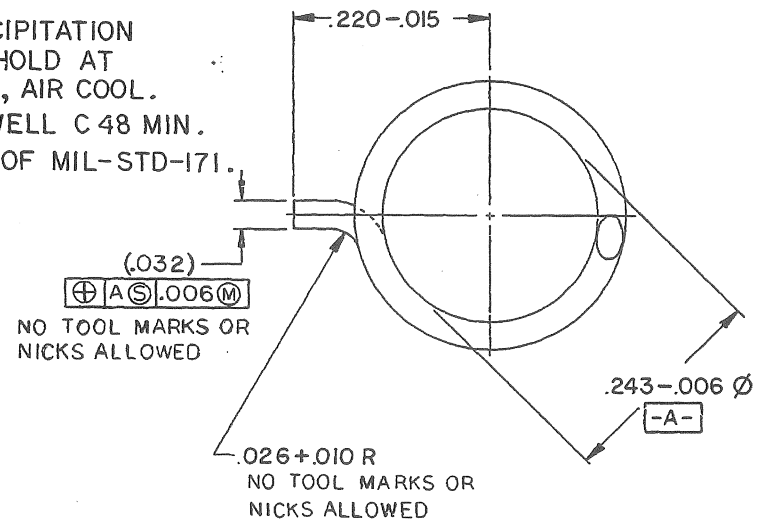

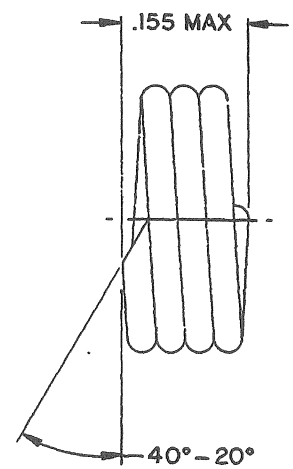

PART NO. 9349109

		MECHANICAL PROPERTIES	DO NOT SCALE DRAWING	ORIGINAL DATE OF DRAWING	U S ARMY ARMAMENT RESEARCH AND DEVELOPMENT CENTER DOVER, NEW JERSEY 07801
		YP	UNLESS OTHERWISE SPECIFIED DIMENSIONS ARE IN INCHES	82-02-26	
		TS		DRAFTSMAN M M / CHECKER DEW	SPRING, CLUTCH
		EL2	TOLERANCES ON DECIMALS ±	ENGR / ENGR	
		RA	FRACTIONS ± ANGLES ±	ENGR / ENGR	
9390032	M4	BH			SIZE C / FSCM NO. 19200 / 9349109
9349106	M16A2	RH			SCALE 10/1 / UNIT WT. / SHEET 1 OF 1
NEXT ASSY	USED ON				
APPLICATION					

ARRADCOM FORM 67 AUG 77 REPLACES SARPA FORM 1040 OCT 75 WHICH MAY BE USED UNTIL EXHAUSTED

October 18, 2004 11:01 AM