NOTES:-

1 - SPEC. MIL-W-13855 AND ANSI Y14.5-73 APPLY.

2 - MATERIAL:- HAMMER CASTING - 9349112.

3 - ALL DIMENSIONS APPLY WHEN LOCATED ON -F- AND -G-.

4 - ALL DIM. EXCEPT THOSE DEFINING -C- ARE BEFORE FINAL PROTECTIVE FINISH.

5 - SURFACES SO NOTED // F .001.

6 - BREAK SHARP EDGES .005 +.010 UNLESS OTHERWISE NOTED.

7 - FILLET RADII .015 - .012 UNLESS OTHERWISE NOTED.

8 - GRIND -C- AFTER HEAT TREAT AND FINAL PROTECTIVE FINISH, DIRECTION OF GRIND // F. MAX METAL REMOVED BY GRINDING .005.

9 - HEAT TREATMENT:- CARBURIZE, CASE DEPTH .014 TO .018 TOTAL. CASE HARDNESS EQUIV. TO RH 30N 75 TO 79.

10 - FINISH 125 ALL SURFACES EXCEPT AS NOTED.

11 - COAT GROUND SURFACE -C- WITH CRROSION RESISTING OIL PER MIL-L-46000 OR MIL-L-63460.

12 - PROTECTIVE FINISH:- 5.3.1.2 OF MIL-STD-171.

13 - NO FINAL FINISH REQUIRED IN THIS AREA. COAT WITH CORROSION RESISTING OIL PER MIL-L-46000, OR MIL-L-63460.

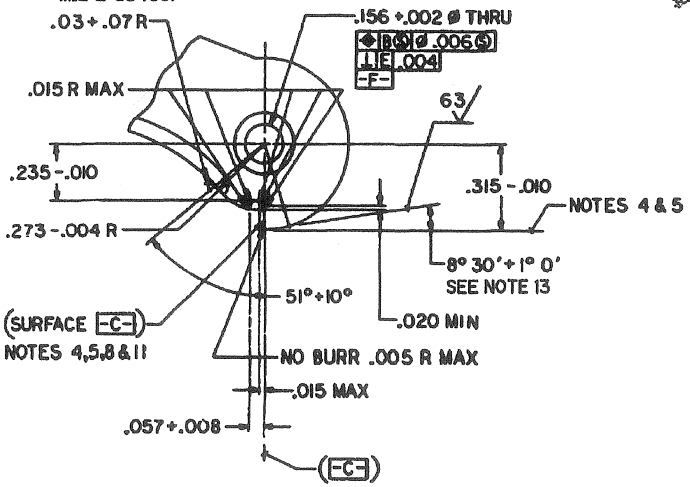

DETAIL A
SCALE: 4/1

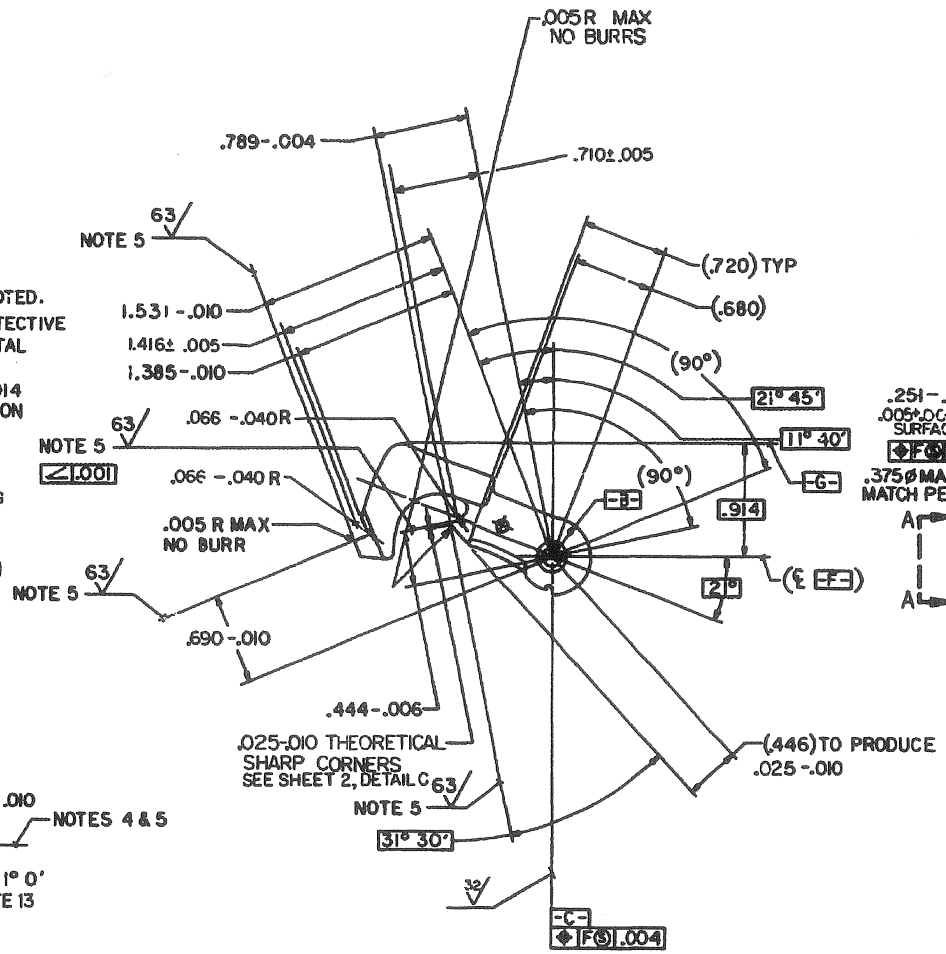

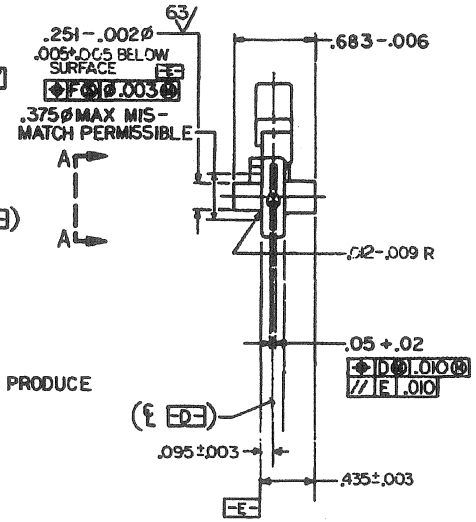

REVISIONS			
SYM	DESCRIPTION	DATE	APPROVAL
—	PRODUCTION RELEASE ERR#252015	820614	
A	NOR W3S 3160/83-12-22	840618	
B	NOR W4S 0030/84-11-15	850402	
C	NOR W4S 3057/84-11-07	850626	
D	NOR W6S 3027/86-05-28 (ECP W6S 3026/86-06-12)	870219	
E	ERR #921200E (ECP W6S 3044/860512) (ECP G9S 3022/890322)	891016	
F	NOR G9S 3120/89-10-26	90-03-30	
G	NOR G9S 3151/900205	901011	
H	NOR G1S 3058 910521	91 07 23	
J	NOR G1S 2018 910708	91-10-11	
K	NOR G0S 3057/900423 (ECP G1S 3179/920151)	920227	
L	NOR G2S 3008/920303	920331	
M	NOR G2S 2040 920915	921106	
N	NOR G3S 3015/930305	930406	
P	NOR G6S 3112 / 960703	960820	FET
R	NOR G6S 3117 / 960719	961204	FET

N	R
SH 2	SH 1
REVISION STATUS OF SHEETS	

PART NO. 9349111

9349110	M4
9349110	M16A2

DO NOT SCALE DRAWING

ORIGINAL DATE OF DRAWING 82-02-26

DRAWN E.J.Z. CHECKED J.W.H.

U.S. ARMY ARMAMENT RESEARCH AND DEVELOPMENT CENTER
DOVER, NEW JERSEY 07801

HAMMER

SIZE D FSCM NO. 19200 9349111

SCALE 2/1 SHEET 1 OF 2

DISTRIBUTION STATEMENT F: FURTHER DISTRIBUTION ONLY AS DIRECTED BY ARDEC, SMCAR-ISW, ROCK ISLAND, IL, ASQNC-AR, 911025.

October 18, 2004 11:03 AM