DRAWING SIZE D (ARRADCOMR 70-12)

NOTICE: RESTRICTED AS TO USE AND DISCLOSURE

THIS ENTIRE DOCUMENT AND ALL INFORMATION THEREON IS PROPRIETARY TO COLTS IDC AND SHALL NOT BE REPRODUCED, DUPLICATED OR COPIED IN WHOLE OR IN PART, DISCLOSED OR MADE AVAILABLE TO ANY OTHER PERSON, FIRM OR CORPORATION OR OTHERWISE USED EXCEPT TO THE EXTENT NECESSARY FOR AND THEN ONLY IN CONNECTION WITH THE PREPARATION AND/OR SUBMISSION OF BIDS OR PROPOSALS RELATED TO A PROCUREMENT BEING EFFECTED BY THE UNITED STATES GOVERNMENT OR IN CONNECTION WITH THE MANUFACTURE IN THE UNITED STATES EITHER BY THE UNITED STATES GOVERNMENT OR UNDER A CONTRACT WITH THE UNITED STATES GOVERNMENT. THIS DOCUMENT WILL BE DISPOSED OF IN ACCORDANCE WITH INSTRUCTIONS ISSUED BY THE RESPONSIBLE CONTRACTING OFFICER UPON COMPLETION OF THE PURPOSE FOR WHICH IT WAS ISSUED.

NOTES:

1-SPEC: MIL-W-13855 APPLIES.

2-MATERIAL: ALUMINUM ALLOY 7075-T73, SPEC. QQ-A-367 OR ASTM B221.

3-FINISH: 7.5.2 OF MIL-STD-171, FILM THICKNESS .0020±.0004. FINISH SHALL BE LUSTERLESS (FLAT), APPROX BLACK, NO. 37038, TABLE IX BUT NOT LIGHTER, THAN GRAY. NO. 36076, TABLE VIII OF FED-STD-595, AND SEAL.

4-FINISH 125√ EXCEPT AS NOTED.

5-ALL DIMENSIONS APPLY BEFORE FINISH.

6-GRIT BLAST BEFORE FINISH, TO PRODUCE NON-REFLECTIVE MATTE SURFACE.

7-BREAK SHARP EDGES .005+.010 EXCEPT AS NOTED.

REVISIONS

SYM	DESCRIPTION	DATE	APPROVAL
—	PRODUCTION RELEASE ERR W3S3149/83-11-14	840210	TT
A	NOR W4S0030/84-11-15	850402	
B	NOR W6S0002 860117 (ECP W6S0048 860523)	870204	
C	NOR W5S8004/860204	890215	
D	NOR G6S2008 960328	960523	RLV

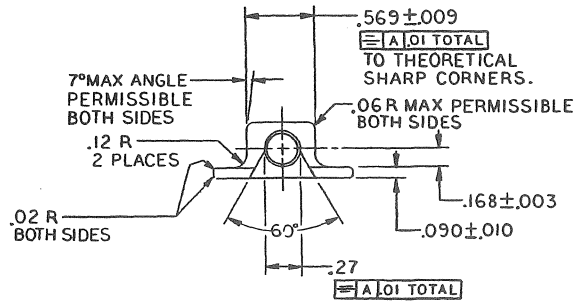

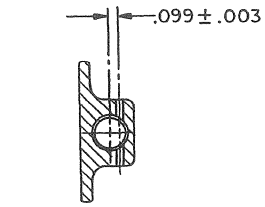

SECTION C-C

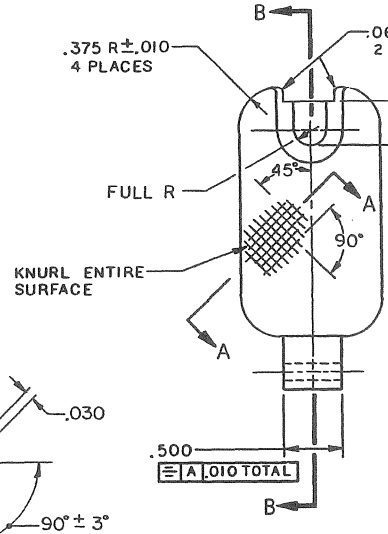

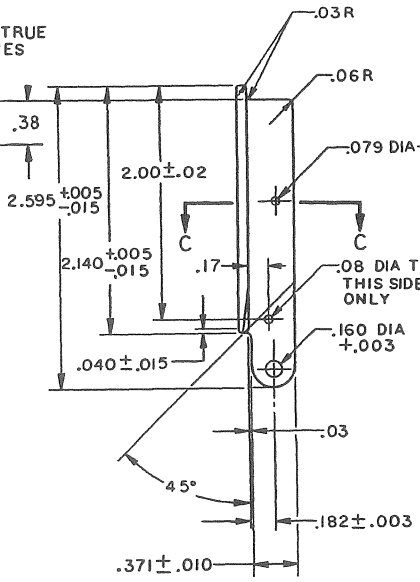

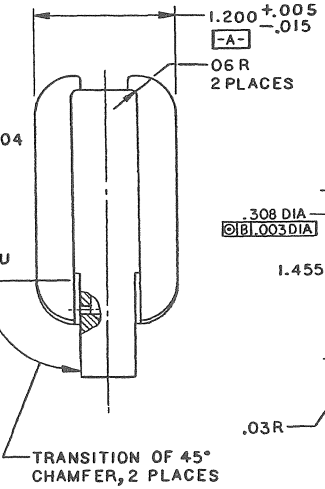

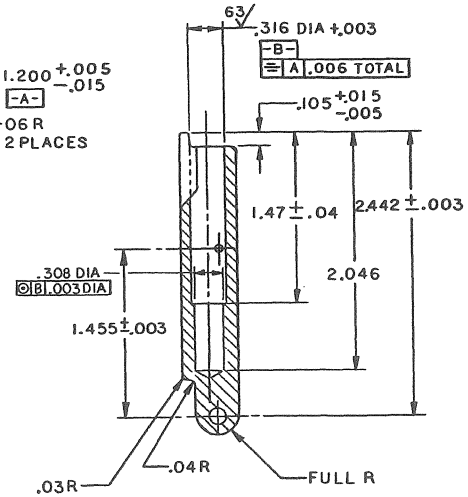

SECTION B-B

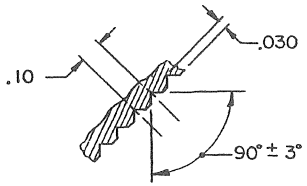

SECTION A-A
SCALE-NONE

PART NO. 9381379

		MECHANICAL PROPERTIES	
		YP	
		TS	
		EL2	
		RA	
		BH	
		RH	
	M16		
	M16A1		
9381380	M16A2		
NEXT ASSY	USED ON		
APPLICATION			

DO NOT SCALE DRAWING
UNLESS OTHERWISE SPECIFIED
DIMENSIONS ARE IN INCHES
TOLERANCES ON DECIMALS .000±.005 .00±.01
FRACTIONS ± ANGLES ± 1°

ORIGINAL DATE OF DRAWING 83-12-21
DRAFTSMAN | CHECKER
ENGR | ENGR
ENGR | ENGR

U S ARMY ARMAMENT RESEARCH AND DEVELOPMENT CENTER
DOVER, NEW JERSEY 07801

DOOR

SIZE D | FSCM NO. 19200 | 9381379
SCALE 2/1 | UNIT WT. | SHEET

ARRADCOM FORM 60 AUG 77 REPLACES DARCOM FORM 1041 NOV 73 WHICH MAY BE USED UNTIL EXHAUSTED

October 15, 2004 11:09 AM